VSD Series III Variable Speed Drives: Open, Bypass, and Disconnect Models

Product Bulletin

Code No. LIT-12013114
Issued August 2018

Johnson Controls® Series III Variable Speed Drives (VSDs) control the speed of AC induction motors used in fan and pump applications.

Key enhancements over the previous generation include:

- Sensor Actuator Bus (SA) is built-in (no option card)
- Standard conformal coating
- Available 100K Short Circuit Current (SCCR) rating for disconnect and bypass models
- Service Switch option on bypass models
- Broken belt software feature
- All iterations Plenum Rated
- Damper End switch logic for Bypass
- Impact resistant one piece plastic enclosure

Figure 1. Series III (VS3) Enclosed Product Portfolio

NEMA 1 / 12 / 3R up to 250HP

Critical Features and Benefits – Open VSD

Integrated 5% DC link choke	Provide harmonic mitigation and input surge protection.
Real time clock	Supports calendaring and PLC functionality
Graphic HOA LCD display and keypad	Simple menu navigation as well as on-screen diagnostics
Conformal coated control and power boards standard	Greater resistance to environmental containments
BACnet, Modbus, Johnson Controls SA Bus built-in	Job never delayed as a result of waiting for option cards
Active Energy Control	Adapts to actual load conditions, optimizing efficiency
Quick Start Wizard	Reduced reliance on training for basic start-ups
Broken Belt	Detects when equipment maintenance is required

Critical Features and Benefits – Bypass VSD

2 contactor bypass with optional Service Switch	Specification matching now permissible
3 contactor manual bypass with multi-color pilot light	Go to solution when specification not provided
2 contactor bypass with isolation fusing, manual bypass, and Multi-Color Pilot Light	Meets isolation fusing Specifications
100K SCCR for bypass panels available as a standard option	Keeps solution price competitive when 100K SCCR is non-negotiable

Complete Specifiable Feature List

Series III (VS3)

Hardware

- Integrated common mode reduction 5% DC link choke with input surge protection
- Variable torque rated for HVAC/R demands
- 110% variable torque overload
- Type 1/IP21 and Type 12/IP54 enclosures available
- Real-time clock—supports calendaring and PLC functionality
- Hand-Off-Auto (HOA) Graphic LCD display and keypad—supports simple menu navigation and on-screen diagnostics
- AUTO operation from keypad and two configurable soft keys
- Conformal coated control and power boards standard
- Control logic can be powered from an external auxiliary control panel—internal drive functions and fieldbus if necessary
- Standard I/O: 8DI, 1DO, 2AI, 2AO, 2FC, 1FA relays
- Standard communications: BACnet/IP & MS/TP, Modbus TCP, Modbus RTU, Johnson Controls Sensor Actuator (SA) Bus
- Two expansion slots—to support additional I/O
- Quick disconnect terminals for I/O connections—supports fast, easy installation
- Multi-color pilot light optional on bypass, standard on disconnect models
- Redundant Auto / Run / Fault LEDs located replicating Keypad LEDs – in the event the keypad is removed
- All models Plenum rated

Software

- Active Energy Control—minimizes energy losses in the motor, resulting in industry-leading energy efficiency for your application
- Energy savings calculator
- Quick Start Wizard upon initial power-up supports fast, easy installation
- Standard applications: Standard, Multi-PID, Advanced
- Copy/paste functionality on drive keypad—allows for fast setup of multiple drives
- Pre-programmed I/O—supports fast, easy installation for most applications
- Dynamic motor regenerative energy management
- Advanced PC Tool with diagnostic capabilities
- Two keypad software keys for easy menu navigation and shortcuts

Agency Approvals

Open Drives

Enclosed Drives

- UL 508C

Catalog Number Selection

V S 3	-	1 D 5	-	2	-	N 1 B	-	2

Values & Description

Horsepower	001	005	020	050	125
	1D5	7D5	025	060	150
	002	010	030	075	200
	003	015	040	100	250

Voltage	1	*208V*	A	*208V 100K SCCR*
	2	*230V*	B	*230V 100K SCCR*
	4	*480V*	C	*480V 100K SCCR*
	5	*575V*	D	*575V 100K SCCR*

Style	N1B	*NEMA 1 Bypass*
	N2B	*NEMA 12 Bypass*
	N3B	*NEMA 3R Bypass without Space Heater*
	S3B	*NEMA 3R Bypass with Space Heater*
	N1C	*NEMA 1 Compact Disconnect*
	N1D	*NEMA 1 Disconnect (includes Pilot Light)*
	N2D	*NEMA 12 Disconnect (includes Pilot Light)*
	N3D	*NEMA 3R Disconnect without Space Heater*
	S3D	*NEMA 3R Disconnect with Space Heater*
	UL1	*NEMA 1 Open Drive*
	UL2	*NEMA 12 Open Drive*

Bypass Configuration	0	*None - used for Open and Disconnect Drives*
	2	*2 Contactor Bypass*
	S	*2 Contactor Bypass with Service Switch*
	3	*3 Contactor Manual Bypass with Multi-Color Pilot Light*
	F	*2 Contactor Manual Bypass with Isolation Fusing and Multi-Color Pilot Light*
	Q	**575V Only* 3 Contactor Electronic Bypass*

Order Code Comments

Horsepower: HP is being used in the order code to readily correlate job data to the VS3 being ordered. The motor's Full Load Amps (FLA) must not exceed the published current output of the drive selected. In some applications (e.g., cooling towers) utilizing lower speed motors (e.g., 1200 or 900 rpm), it is critical to verify motor FLA. The FLA of the VS3 product appears in the Product Selection tables that follow.

Voltage: Bypass & Disconnect models default to the 100K SCCR design as a function of HP, changing the order code character to the corresponding 100K SCCR voltage code. Example: VS3-050-**4-**N1B-2 becomes VS3-050-**C**-N1B-2.

- 208/230V: 30HP and larger default to voltage order code 'A or B'
- 480V: 50HP and larger default to voltage code 'C'
- All compact disconnect models (N1C) use the 100K SCCR order code: 'A,B,C,D'
- All 575V enclosed product use the 100K SCCR order code 'D' for voltage

The 100K SCCR option is available as an option on <u>any</u> disconnect or bypass model across the HP range.

Bypass Configuration: Option code 'F' is HP limited to 20HP for 208/230V, and 40HP for 480V, and is n/a on 575V.

.Product Selection – General Description & Overview

Open Drive

Compact Disconnect

Bypass / Disconnect

Uses & Applications

Open drives are typically installed inside of a customer supplied cabinet. Open drives are a popular choice for OEMs, or when retrofitting an existing field installation. They are available in NEMA 1 and NEMA 12 enclosures.

Compact disconnect drives add circuit protection to an open drive. These are ideal when branch circuit protection is otherwise not available, and/or the existing control panels are not capable of housing a drive, either because of space, or they are strictly low voltage panels. They are ideal for OEMs adding drives to existing equipment designs. Compact disconnect drives are available in NEMA 1 enclosures only.

Bypass drives are specified by Division 15 / 16 / 17, and are shipped to the jobsite for field installation. A bypass drive solution has the ability to run the motor across the line without assistance from the drive. The benefit of a bypass solution is in the event of drive failure, the equipment may remain running if full speed operation is permissible.
All Bypass drives include a disconnect switch.

Disconnect drives (detailed picture not shown) are the same form factor as a bypass drive and include a pilot light to indicate operation status. These are popular in pumping applications.

Bypass and disconnect drives are available in NEMA 1, NEMA 12, and NEMA 3R enclosures.
NEMA 3R enclosures (picture not shown) are the ONLY suitable enclosure type for outdoor / rooftop mounting.

Product Selection

200-230V Open Drives

HP	NEMA 1 (UL Type 1)	NEMA 12 (UL Type 12)	Output Current (A)	Frame Size	Weight (lbs)
1	VS3-001-2-UL1-0	VS3-001-2-UL2-0	4.8	1	14
1.5	VS3-1D5-2-UL1-0	VS3-1D5-2-UL2-0	6.6		
2	VS3-002-2-UL1-0	VS3-002-2-UL2-0	7.8		
3	VS3-003-2-UL1-0	VS3-003-2-UL2-0	11		
5	VS3-005-2-UL1-0	VS3-005-2-UL2-0	17.5	2	23
7.5	VS3-7D5-2-UL1-0	VS3-7D5-2-UL2-0	25		
10	VS3-010-2-UL1-0	VS3-010-2-UL2-0	31		
15	VS3-015-2-UL1-0	VS3-015-2-UL2-0	48	3	50
20	VS3-020-2-UL1-0	VS3-020-2-UL2-0	61		
25	VS3-025-2-UL1-0	VS3-025-2-UL2-0	75	4	78
30	VS3-030-2-UL1-0	VS3-030-2-UL2-0	88		
40	VS3-040-2-UL1-0	VS3-040-2-UL2-0	114		
50	VS3-050-2-UL1-0	VS3-050-2-UL2-0	143	5	154
60	VS3-060-2-UL1-0	VS3-060-2-UL2-0	170		
75	VS3-075-2-UL1-0	VS3-075-2-UL2-0	211		
100	VS3-100-2-UL1-0	VS3-100-2-UL2-0	261	6	247
125	VS3-125-2-UL1-0	VS3-125-2-UL2-0	312		

480V Open Drives

HP	NEMA 1 (UL Type 1)	NEMA 12 (UL Type 12)	Output Current (A)	Frame Size	Weight (lbs)
1.5	VS3-1D5-4-UL1-0	VS3-1D5-4-UL2-0	3.3	1	14
2	VS3-002-4-UL1-0	VS3-002-4-UL2-0	4.3		
3	VS3-003-4-UL1-0	VS3-003-4-UL2-0	5.6		
5	VS3-005-4-UL1-0	VS3-005-4-UL2-0	9		
7.5	VS3-7D5-4-UL1-0	VS3-7D5-4-UL2-0	12		
10	VS3-010-4-UL1-0	VS3-010-4-UL2-0	16	2	23
15	VS3-015-4-UL1-0	VS3-015-4-UL2-0	23		
20	VS3-020-4-UL1-0	VS3-020-4-UL2-0	31		
25	VS3-025-4-UL1-0	VS3-025-4-UL2-0	38	3	50
30	VS3-030-4-UL1-0	VS3-030-4-UL2-0	46		
40	VS3-040-4-UL1-0	VS3-040-4-UL2-0	61		
50	VS3-050-4-UL1-0	VS3-050-4-UL2-0	72	4	78
60	VS3-060-4-UL1-0	VS3-060-4-UL2-0	87		
75	VS3-075-4-UL1-0	VS3-075-4-UL2-0	105		
100	VS3-100-4-UL1-0	VS3-100-4-UL2-0	140	5	154
125	VS3-125-4-UL1-0	VS3-125-4-UL2-0	170		
150	VS3-150-4-UL1-0	VS3-150-4-UL2-0	205		
200	VS3-200-4-UL1-0	VS3-200-4-UL2-0	261	6	247
250	VS3-250-4-UL1-0	VS3-250-4-UL2-0	310		

Product Selection

575V Open Drives - NEMA 1 (UL Type 1) / NEMA 12 (UL Type 12)

HP	NEMA 1 (UL Type 1)	NEMA 12 (UL Type 12)	Output Current (A)	Frame Size	Weight (lbs)
3	VS3-003-5-UL1-0	VS3-003-5-UL2-0	4.5	1	14
5	VS3-005-5-UL1-0	VS3-005-5-UL2-0	7.5		
7.5	VS3-7D5-5-UL1-0	VS3-7D5-5-UL2-0	10		
10	VS3-010-5-UL1-0	VS3-010-5-UL2-0	13.5	2	23
15	VS3-015-5-UL1-0	VS3-015-5-UL2-0	18		
20	VS3-020-5-UL1-0	VS3-020-5-UL2-0	22		
25	VS3-025-5-UL1-0	VS3-025-5-UL2-0	27	3	50
30	VS3-030-5-UL1-0	VS3-030-5-UL2-0	34		
40	VS3-040-5-UL1-0	VS3-040-5-UL2-0	41		
50	VS3-050-5-UL1-0	VS3-050-5-UL2-0	52	4	78
60	VS3-060-5-UL1-0	VS3-060-5-UL2-0	62		
75	VS3-075-5-UL1-0	VS3-075-5-UL2-0	80		
100	VS3-100-5-UL1-0	VS3-100-5-UL2-0	100	5	154
125	VS3-125-5-UL1-0	VS3-125-5-UL2-0	125		
150	VS3-150-5-UL1-0	VS3-150-5-UL2-0	144		
200	VS3-200-5-UL1-0	VS3-200-5-UL2-0	208	6	247
250	VS3-250-5-UL1-0	VS3-250-5-UL2-0	250		

VS3 Open Drive Dimensions

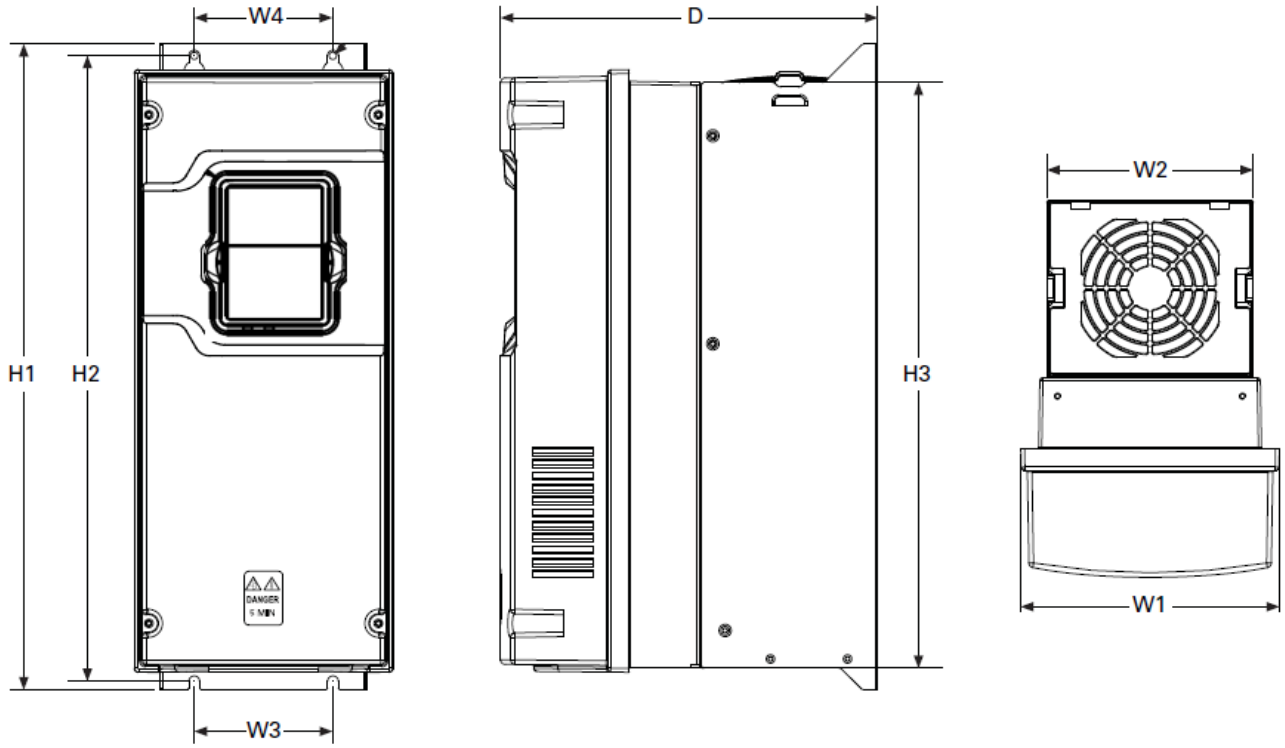

FR	HP			Inches (mm)							Weight
	200-230V	480V	575V	D	H1	H2	H3	W1	W2	W3 = W4	lbs (kg)
1	1, 2 ,3	1.5, 2, 3 5, 7.5	3 & 5	7.91 (200.9)	12.87 (326.9)	12.28 (311.9)	11.50 (292.1)	6.02 (153.0)	4.80 (121.9)	3.94 (100.1)	14 (6.3)
2	5, 7.5 10	10, 15 20	10, 15 20	9.63 (244.7)	16.50 (419.1)	15.98 (405.9)	14.96 (380.0)	6.61 (167.8)	5.28 (134.1)	3.54 (90.00)	23 (10.4)
3	15 & 20	25, 30 40	25, 30 40	10.44 (265.1)	21.97 (558.0)	21.46 (545.0)	20.41 (518.5)	8.06 (204.6)	7.24 (183.9)	4.92 (125.0)	50 (22.7)
4	25,30,40	50, 60 75	50, 60 75	11.57 (294.0)	24.80 (629.9)	24.31 (617.5)	23.27 (591.1)	9.36 (237.7)	9.13 (237.7)	8.07 (205.0)	78 (35.38)
5	50, 60,75	100, 125, 150	100, 125, 150	13.41 (340.7)	34.98 (888.5)	29.65 (753.1)	27.83 (706.9)	11.34 (288.0)	11.10 (281.9)	8.66 (220.0)	154 (69.9)
6	100 & 125	200 & 250	200 & 250	14.61 (371.0)	34.04 (864.5)	33.27 (845.0)	40.75 (1035.0)	19.13 (486.0)	18.90 (480.0)	15.75 (400.0)	247 (112)

Product Selection

208V Compact Disconnect Drives - NEMA 1 (UL Type 1)

HP	Order Code	Output Current (A)	Frame Size	Weight (lbs)
1	VS3-001-A-N1C-0	4	H1D	19
1.5	VS3-1D5-A-N1C-0	6.8		
2	VS3-002-A-N1C-0	7.5		
3	VS3-003-A-N1C-0	10.6		
5	VS3-005-A-N1C-0	16.7	H2D	28
7.5	VS3-7D5-A-N1C-0	24.3		
10	VS3-010-A-N1C-0	30.8		
15	VS3-015-A-N1C-0	46.2	H3D	55
20	VS3-020-A-N1C-0	59.4		
25	VS3-025-A-N1C-0	74.8	H4D	83
30	VS3-030-A-N1C-0	88		
40	VS3-040-A-N1C-0	114		

230V Compact Disconnect Drives - NEMA 1 (UL Type 1)

HP	Order Code	Output Current (A)	Frame Size	Weight (lbs)
1	VS3-001-B-N1C-0	4.2	H1D	19
1.5	VS3-1D5-B-N1C-0	6		
2	VS3-002-B-N1C-0	6.8		
3	VS3-003-B-N1C-0	9.6		
5	VS3-005-B-N1C-0	15.2	H2D	28
7.5	VS3-7D5-B-N1C-0	22		
10	VS3-010-B-N1C-0	28		
15	VS3-015-B-N1C-0	42	H3D	55
20	VS3-020-B-N1C-0	54		
25	VS3-025-B-N1C-0	68	H4D	83
30	VS3-030-B-N1C-0	80		
40	VS3-040-B-N1C-0	104		

Product Selection

480V Compact Disconnect Drives - NEMA 1 (UL Type 1)

HP	Order Code	Output Current (A)	Frame Size	Weight (lbs)
1.5	VS3-1D5-C-N1C-0	3.3	H1D	19
2	VS3-002-C-N1C-0	4.3		
3	VS3-003-C-N1C-0	5.6		
5	VS3-005-C-N1C-0	9		
7.5	VS3-7D5-C-N1C-0	12		
10	VS3-010-C-N1C-0	16	H2D	28
15	VS3-015-C-N1C-0	23		
20	VS3-020-C-N1C-0	31		
25	VS3-025-C-N1C-0	38	H3D	55
30	VS3-030-C-N1C-0	46		
40	VS3-040-C-N1C-0	61		
50	VS3-050-C-N1C-0	72	H4D	83
60	VS3-060-C-N1C-0	87		
75	VS3-075-C-N1C-0	105		

575V Compact Disconnect Drives - NEMA 1 (UL Type 1)

HP	Order Code	Output Current (A)	Frame Size	Weight (lbs)
3	VS3-003-D-N1C-0	4.5	H1D	19
5	VS3-005-D-N1C-0	7.5		
7.5	VS3-7D5-D-N1C-0	10		
10	VS3-010-D-N1C-0	13.5	H2D	28
15	VS3-015-D-N1C-0	18		
20	VS3-020-D-N1C-0	22		
25	VS3-025-D-N1C-0	27	H3D	55
30	VS3-030-D-N1C-0	34		
40	VS3-040-D-N1C-0	41		
50	VS3-050-D-N1C-0	52	H4D	83
60	VS3-060-D-N1C-0	62		
75	VS3-075-D-N1C-0	80		

Compact Disconnect Drive Dimensions

Inches (mm)

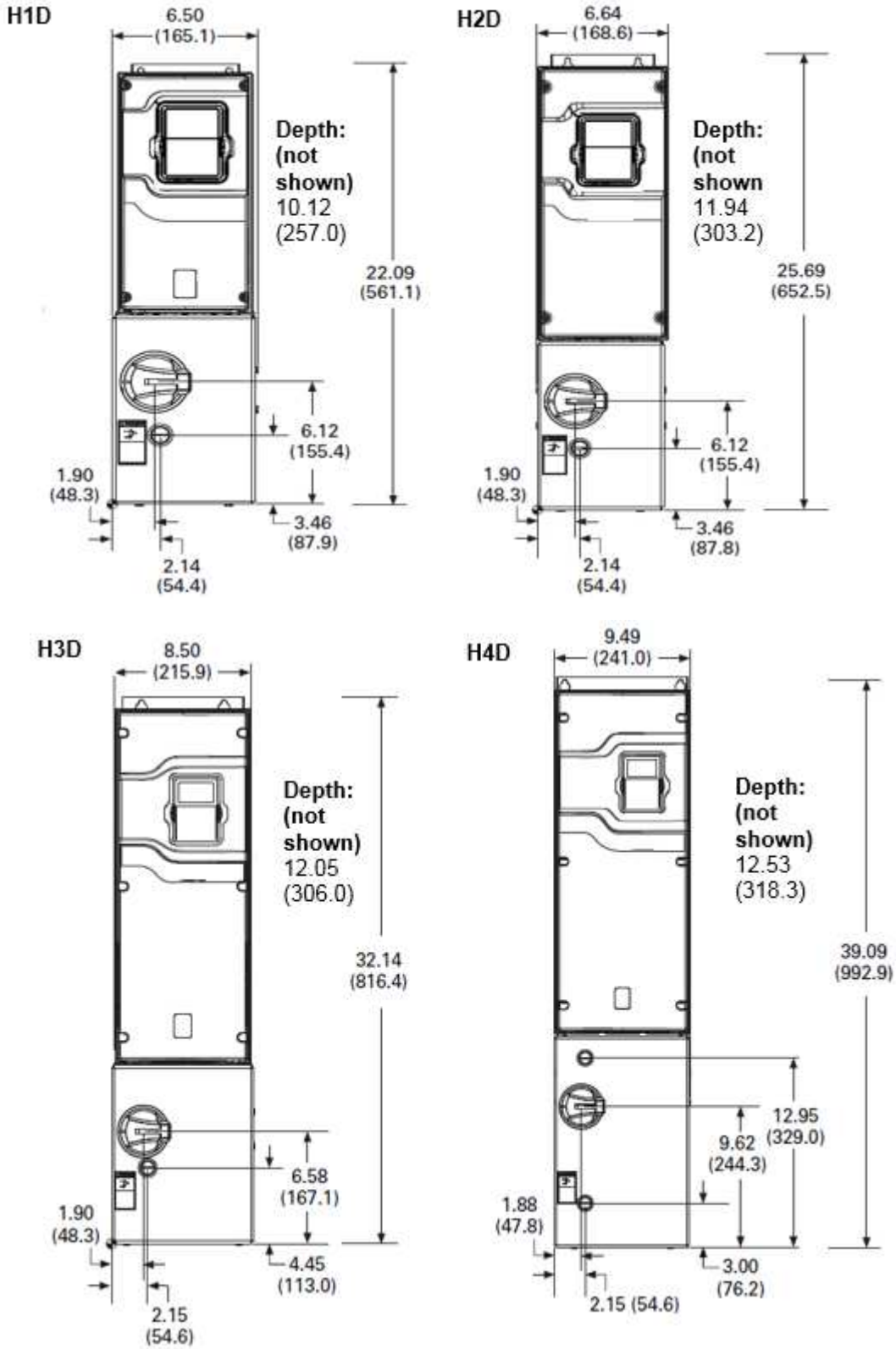

Product Selection

208V Disconnect Drives

HP	NEMA 1 (UL Type 1)	NEMA 12 (UL Type 12)	NEMA 3R	Output Current (A)	Frame Size: NEMA 1	Frame Size: NEMA 12 / NEMA 3R
1	VS3-001-1-N1D-0	VS3-001-1-N2D-0	VS3-001-1-N3D-0	4.6	H1S	H3X
1.5	VS3-1D5-1-N1D-0	VS3-1D5-1-N2D-0	VS3-1D5-1-N3D-0	6.6		
2	VS3-002-1-N1D-0	VS3-002-1-N2D-0	VS3-002-1-N3D-0	7.5		
3	VS3-003-1-N1D-0	VS3-003-1-N2D-0	VS3-003-1-N3D-0	10.6		
5	VS3-005-1-N1D-0	VS3-005-1-N2D-0	VS3-005-1-N3D-0	16.7	H2S	
7.5	VS3-7D5-1-N1D-0	VS3-7D5-1-N2D-0	VS3-7D5-1-N3D-0	24.3		
10	VS3-010-1-N1D-0	VS3-010-1-N2D-0	VS3-010-1-N3D-0	30.8		
15	VS3-015-1-N1D-0	VS3-015-1-N2D-0	VS3-015-1-N3D-0	46.2	H3	
20	VS3-020-1-N1D-0	VS3-020-1-N2D-0	VS3-020-1-N3D-0	59.4		
25	VS3-025-1-N1D-0	VS3-025-1-N2D-0	VS3-025-1-N3D-0	74.8	H4	BX
30	VS3-030-**A**-N1D-0	VS3-030-**A**-N2D-0	VS3-030-**A**-N3D-0	88		
40	VS3-040-**A**-N1D-0	VS3-040-**A**-N2D-0	VS3-040-**A**-N3D-0	114		
50	VS3-050-**A**-N1D-0	VS3-050-**A**-N2D-0	VS3-050-**A**-N3D-0	143	CX	CX
60	VS3-060-**A**-N1D-0	VS3-060-**A**-N2D-0	VS3-060-**A**-N3D-0	169		
75	VS3-075-**A**-N1D-0	VS3-075-**A**-N2D-0	VS3-075-**A**-N3D-0	211		
100	VS3-100-**A**-N1D-0	VS3-100-**A**-N2D-0	VS3-100-**A**-N3D-0	261	DX	DX

230V Disconnect Drives

HP	NEMA 1 (UL Type 1)	NEMA 12 (UL Type 12)	NEMA 3R	Output Current (A)	Frame Size: NEMA 1	Frame Size: NEMA 12 / NEMA 3R
1	VS3-001-2-N1D-0	VS3-001-2-N2D-0	VS3-001-2-N3D-0	4.2	H1S	H3X
1.5	VS3-1D5-2-N1D-0	VS3-1D5-2-N2D-0	VS3-1D5-2-N3D-0	6		
2	VS3-002-2-N1D-0	VS3-002-2-N2D-0	VS3-002-2-N3D-0	6.8		
3	VS3-003-2-N1D-0	VS3-003-2-N2D-0	VS3-003-2-N3D-0	9.6		
5	VS3-005-2-N1D-0	VS3-005-2-N2D-0	VS3-005-2-N3D-0	15.2	H2S	
7.5	VS3-7D5-2-N1D-0	VS3-7D5-2-N2D-0	VS3-7D5-2-N3D-0	22		
10	VS3-010-2-N1D-0	VS3-010-2-N2D-0	VS3-010-2-N3D-0	28		
15	VS3-015-2-N1D-0	VS3-015-2-N2D-0	VS3-015-2-N3D-0	42	H3	
20	VS3-020-2-N1D-0	VS3-020-2-N2D-0	VS3-020-2-N3D-0	54		
25	VS3-025-2-N1D-0	VS3-025-2-N2D-0	VS3-025-2-N3D-0	68	H4	BX
30	VS3-030-**B**-N1D-0	VS3-030-**B**-N2D-0	VS3-030-**B**-N3D-0	80		
40	VS3-040-**B**-N1D-0	VS3-040-**B**-N2D-0	VS3-040-**B**-N3D-0	104		
50	VS3-050-**B**-N1D-0	VS3-050-**B**-N2D-0	VS3-050-**B**-N3D-0	130	CX	CX
60	VS3-060-**B**-N1D-0	VS3-060-**B**-N2D-0	VS3-060-**B**-N3D-0	154		
75	VS3-075-**B**-N1D-0	VS3-075-**B**-N2D-0	VS3-075-**B**-N3D-0	192		
100	VS3-100-**B**-N1D-0	VS3-100-**B**-N2D-0	VS3-100-**B**-N3D-0	248	DX	DX
125	VS3-125-**B**-N1D-0	VS3-125-**B**-N2D-0	VS3-125-**B**-N3D-0	312		

Product Selection

480V Disconnect Drives

HP	NEMA 1 (UL Type 1)	NEMA 12 (UL Type 12)	NEMA 3R	Output Curent (A)	Frame Size	
					NEMA 1	NEMA 12 / NEMA 3R
1.5	VS3-1D5-4-N1D-0	VS3-1D5-4-N2D-0	VS3-1D5-4-N3D-0	3	H1S	H3X
2	VS3-002-4-N1D-0	VS3-002-4-N2D-0	VS3-002-4-N3D-0	3.4		
3	VS3-003-4-N1D-0	VS3-003-4-N2D-0	VS3-003-4-N3D-0	4.8		
5	VS3-005-4-N1D-0	VS3-005-4-N2D-0	VS3-005-4-N3D-0	7.6		
7.5	VS3-7D5-4-N1D-0	VS3-7D5-4-N2D-0	VS3-7D5-4-N3D-0	11		
10	VS3-010-4-N1D-0	VS3-010-4-N2D-0	VS3-010-4-N3D-0	14	H2	
15	VS3-015-4-N1D-0	VS3-015-4-N2D-0	VS3-015-4-N3D-0	21		
20	VS3-020-4-N1D-0	VS3-020-4-N2D-0	VS3-020-4-N3D-0	27		
25	VS3-025-4-N1D-0	VS3-025-4-N2D-0	VS3-025-4-N3D-0	34	H3	
30	VS3-030-4-N1D-0	VS3-030-4-N2D-0	VS3-030-4-N3D-0	40		
40	VS3-040-4-N1D-0	VS3-040-4-N2D-0	VS3-040-4-N3D-0	52		
50	VS3-050-**C**-N1D-0	VS3-050-**C**-N2D-0	VS3-050-**C**-N3D-0	65	H4	BX
60	VS3-060-**C**-N1D-0	VS3-060-**C**-N2D-0	VS3-060-**C**-N3D-0	77		
75	VS3-075-**C**-N1D-0	VS3-075-**C**-N2D-0	VS3-075-**C**-N3D-0	96		
100	VS3-100-**C**-N1D-0	VS3-100-**C**-N2D-0	VS3-100-**C**-N3D-0	124	CX	CX
125	VS3-125-**C**-N1D-0	VS3-125-**C**-N2D-0	VS3-125-**C**-N3D-0	156		
150	VS3-150-**C**-N1D-0	VS3-150-**C**-N2D-0	VS3-150-**C**-N3D-0	180		
200	VS3-200-**C**-N1D-0	VS3-200-**C**-N2D-0	VS3-200-**C**-N3D-0	240	DX	DX
250	VS3-250-**C**-N1D-0	VS3-250-**C**-N2D-0	VS3-250-**C**-N3D-0	302		

Product Selection

575V Disconnect Drives

HP	NEMA 1 (UL Type 1)	NEMA 12 (UL Type 12)	NEMA 3R	Output Current (A)	Frame Size	
					NEMA 1	NEMA 12 / NEMA 3R
3	VS3-003-D-N1D-0	VS3-003-D-N2D-0	VS3-003-D-N3D-0	3.9	H1	H3X
5	VS3-005-D-N1D-0	VS3-005-D-N2D-0	VS3-005-D-N3D-0	6.1		
7.5	VS3-7D5-D-N1D-0	VS3-7D5-D-N2D-0	VS3-7D5-D-N3D-0	9		
10	VS3-010-D-N1D-0	VS3-010-D-N2D-0	VS3-010-D-N3D-0	11	H2	
15	VS3-015-D-N1D-0	VS3-015-D-N2D-0	VS3-015-D-N3D-0	17		
20	VS3-020-D-N1D-0	VS3-020-D-N2D-0	VS3-020-D-N3D-0	22		
25	VS3-025-D-N1D-0	VS3-025-D-N2D-0	VS3-025-D-N3D-0	27	H3	
30	VS3-030-D-N1D-0	VS3-030-D-N2D-0	VS3-030-D-N3D-0	32		
40	VS3-040-D-N1D-0	VS3-040-D-N2D-0	VS3-040-D-N3D-0	41		
50	VS3-050-D-N1D-0	VS3-050-D-N2D-0	VS3-050-D-N3D-0	52	H4	BX
60	VS3-060-D-N1D-0	VS3-060-D-N2D-0	VS3-060-D-N3D-0	62		
75	VS3-075-D-N1D-0	VS3-075-D-N2D-0	VS3-075-D-N3D-0	77		
100	VS3-100-D-N1D-0	VS3-100-D-N2D-0	VS3-100-D-N3D-0	99	CX	CX
125	VS3-125-D-N1D-0	VS3-125-D-N2D-0	VS3-125-D-N3D-0	125		
150	VS3-150-D-N1D-0	VS3-150-D-N2D-0	VS3-150-D-N3D-0	144		
200	VS3-200-D-N1D-0	VS3-200-D-N2D-0	VS3-200-D-N3D-0	192	DX	DX
250	VS3-250-D-N1D-0	VS3-250-D-N2D-0	VS3-250-D-N3D-0	242		

Product Selection

208V Bypass Drives

HP	NEMA 1 (UL Type 1)	NEMA 12 (UL Type 12)	NEMA 3R	Output Current (A)	Frame Size	
					NEMA 1	NEMA 12 / NEMA 3R
1	VS3-001-1-N1B-_	VS3-001-1-N2B-_	VS3-001-1-_3B-_	4.6	H1S	H3X
1.5	VS3-1D5-1-N1B-_	VS3-1D5-1-N2B-_	VS3-1D5-1-_3B-_	6.6		
2	VS3-002-1-N1B-_	VS3-002-1-N2B-_	VS3-002-1-_3B-_	7.5		
3	VS3-003-1-N1B-_	VS3-003-1-N2B-_	VS3-003-1-_3B-_	10.6		
5	VS3-005-1-N1B-_	VS3-005-1-N2B-_	VS3-005-1-_3B-_	16.7	H2S	
7.5	VS3-7D5-1-N1B-_	VS3-7D5-1-N2B-_	VS3-7D5-1-_3B-_	24.3		
10	VS3-010-1-N1B-_	VS3-010-1-N2B-_	VS3-010-1-_3B-_	30.8		
15	VS3-015-1-N1B-_	VS3-015-1-N2B-_	VS3-015-1-_3B-_	46.2	H3	
20	VS3-020-1-N1B-_	VS3-020-1-N2B-_	VS3-020-1-_3B-_	59.4		
25	VS3-025-1-N1B-_	VS3-025-1-N2B-_	VS3-025-1-_3B-_	74.8	H4	CX
30	VS3-030-**A**-N1B-_	VS3-030-**A**-N2B-_	VS3-030-**A**-_3B-_	88		
40	VS3-040-**A**-N1B-_	VS3-040-**A**-N2B-_	VS3-040-**A**-_3B-_	114		
50	VS3-050-**A**-N1B-_	VS3-050-**A**-N2B-_	VS3-050-**A**-_3B-_	143	DX	DX
60	VS3-060-**A**-N1B-_	VS3-060-**A**-N2B-_	VS3-060-**A**-_3B-_	169		
75	VS3-075-**A**-N1B-_	VS3-075-**A**-N2B-_	VS3-075-**A**-_3B-_	211		
100	VS3-100-**A**-N1B-_	VS3-100-**A**-N2B-_	VS3-100-**A**-_3B-_	261		

230V Bypass Drives

HP	NEMA 1 (UL Type 1)	NEMA 12 (UL Type 12)	NEMA 3R	Output Current (A)	Frame Size	
					NEMA 1	NEMA 12 / NEMA 3R
1	VS3-001-2-N1B-_	VS3-001-2-N2B-_	VS3-001-2-_3B-_	4.2	H1S	H3X
1.5	VS3-1D5-2-N1B-_	VS3-1D5-2-N2B-_	VS3-1D5-2-_3B-_	6		
2	VS3-002-2-N1B-_	VS3-002-2-N2B-_	VS3-002-2-_3B-_	6.8		
3	VS3-003-2-N1B-_	VS3-003-2-N2B-_	VS3-003-2-_3B-_	9.6		
5	VS3-005-2-N1B-_	VS3-005-2-N2B-_	VS3-005-2-_3B-_	15.2	H2S	
7.5	VS3-7D5-2-N1B-_	VS3-7D5-2-N2B-_	VS3-7D5-2-_3B-_	22		
10	VS3-010-2-N1B-_	VS3-010-2-N2B-_	VS3-010-2-_3B-_	28		
15	VS3-015-2-N1B-_	VS3-015-2-N2B-_	VS3-015-2-_3B-_	42	H3	
20	VS3-020-2-N1B-_	VS3-020-2-N2B-_	VS3-020-2-_3B-_	54		
25	VS3-025-2-N1B-_	VS3-025-2-N2B-_	VS3-025-2-_3B-_	68	H4	CX
30	VS3-030-**B**-N1B-_	VS3-030-**B**-N2B-_	VS3-030-**B**-_3B-_	80		
40	VS3-040-**B**-N1B-_	VS3-040-**B**-N2B-_	VS3-040-**B**-_3B-_	104		
50	VS3-050-**B**-N1B-_	VS3-050-**B**-N2B-_	VS3-050-**B**-_3B-_	130	DX	DX
60	VS3-060-**B**-N1B-_	VS3-060-**B**-N2B-_	VS3-060-**B**-_3B-_	154		
75	VS3-075-**B**-N1B-_	VS3-075-**B**-N2B-_	VS3-075-**B**-_3B-_	192		
100	VS3-100-**B**-N1B-_	VS3-100-**B**-N2B-_	VS3-100-**B**-_3B-_	248		
125	VS3-125-**B**-N1B-_	VS3-125-**B**-N2B-_	VS3-125-**B**-_3B-_	312		

Product Selection

480V Bypass Drives

HP	NEMA 1 (UL Type 1)	NEMA 12 (UL Type 12)	NEMA 3R	Output Current (A)	Frame Size	
					NEMA 1	NEMA 12 / NEMA 3R
1.5	VS3-1D5-4-N1B-_	VS3-1D5-4-N2B-_	VS3-1D5-4-_3B-_	3	H1S	H3X
2	VS3-002-4-N1B-_	VS3-002-4-N2B-_	VS3-002-4-_3B-_	3.4		
3	VS3-003-4-N1B-_	VS3-003-4-N2B-_	VS3-003-4-_3B-_	4.8		
5	VS3-005-4-N1B-_	VS3-005-4-N2B-_	VS3-005-4-_3B-_	7.6		
7.5	VS3-7D5-4-N1B-_	VS3-7D5-4-N2B-_	VS3-7D5-4-_3B-_	11		
10	VS3-010-4-N1B-_	VS3-010-4-N2B-_	VS3-010-4-_3B-_	14	H2	
15	VS3-015-4-N1B-_	VS3-015-4-N2B-_	VS3-015-4-_3B-_	21		
20	VS3-020-4-N1B-_	VS3-020-4-N2B-_	VS3-020-4-_3B-_	27		
25	VS3-025-4-N1B-_	VS3-025-4-N2B-_	VS3-025-4-_3B-_	34	H3	
30	VS3-030-4-N1B-_	VS3-030-4-N2B-_	VS3-030-4-_3B-_	40		
40	VS3-040-4-N1B-_	VS3-040-4-N2B-_	VS3-040-4-_3B-_	52		
50	VS3-050-**C**-N1B-_	VS3-050-**C**-N2B-_	VS3-050-**C**-_3B-_	65	H4	CX
60	VS3-060-**C**-N1B-_	VS3-060-**C**-N2B-_	VS3-060-**C**-_3B-_	77		
75	VS3-075-**C**-N1B-_	VS3-075-**C**-N2B-_	VS3-075-**C**-_3B-_	96		
100	VS3-100-**C**-N1B-_	VS3-100-**C**-N2B-_	VS3-100-**C**-_3B-_	124	DX	DX
125	VS3-125-**C**-N1B-_	VS3-125-**C**-N2B-_	VS3-125-**C**-_3B-_	156		
150	VS3-150-**C**-N1B-_	VS3-150-**C**-N2B-_	VS3-150-**C**-_3B-_	180		
200	VS3-200-**C**-N1B-_	VS3-200-**C**-N2B-_	VS3-200-**C**-_3B-_	240		
250	VS3-250-**C**-N1B-_	VS3-250-**C**-N2B-_	VS3-250-**C**-_3B-_	302		

Product Selection

575V Bypass Drives

HP	NEMA 1 (UL Type 1)	NEMA 12 (UL Type 12)	NEMA 3R	Output Current (A)	Frame Size	
					NEMA 1	NEMA 12 / NEMA 3R
3	VS3-003-D-N1B-_	VS3-003-D-N2B-_	VS3-003-D-_3B-_	3.9	H1	H3X
5	VS3-005-D-N1B-_	VS3-005-D-N2B-_	VS3-005-D-_3B-_	6.1		
7.5	VS3-7D5-D-N1B-_	VS3-7D5-D-N2B-_	VS3-7D5-D-_3B-_	9		
10	VS3-010-D-N1B-_	VS3-010-D-N2B-_	VS3-010-D-_3B-_	11	H2	
15	VS3-015-D-N1B-_	VS3-015-D-N2B-_	VS3-015-D-_3B-_	17		
20	VS3-020-D-N1B-_	VS3-020-D-N2B-_	VS3-020-D-_3B-_	22		
25	VS3-025-D-N1B-_	VS3-025-D-N2B-_	VS3-025-D-_3B-_	27	H3	
30	VS3-030-D-N1B-_	VS3-030-D-N2B-_	VS3-030-D-_3B-_	32		
40	VS3-040-D-N1B-_	VS3-040-D-N2B-_	VS3-040-D-_3B-_	41		
50	VS3-050-D-N1B-_	VS3-050-D-N2B-_	VS3-050-D-_3B-_	52	H4	CX
60	VS3-060-D-N1B-_	VS3-060-D-N2B-_	VS3-060-D-_3B-_	62		
75	VS3-075-D-N1B-_	VS3-075-D-N2B-_	VS3-075-D-_3B-_	77		
100	VS3-100-D-N1B-_	VS3-100-D-N2B-_	VS3-100-D-_3B-_	99	DX	DX
125	VS3-125-D-N1B-_	VS3-125-D-N2B-_	VS3-125-D-_3B-_	125		
150	VS3-150-D-N1B-_	VS3-150-D-N2B-_	VS3-150-D-_3B-_	144		
200	VS3-200-D-N1B-_	VS3-200-D-N2B-_	VS3-200-D-_3B-_	192		
250	VS3-250-D-N1B-_	VS3-250-D-N2B-_	VS3-250-D-_3B-_	242		

Disconnect and Bypass Drive Dimensions

Inches (mm)

Frame Size: H1S

Packaged Weight: 49.3 lbs

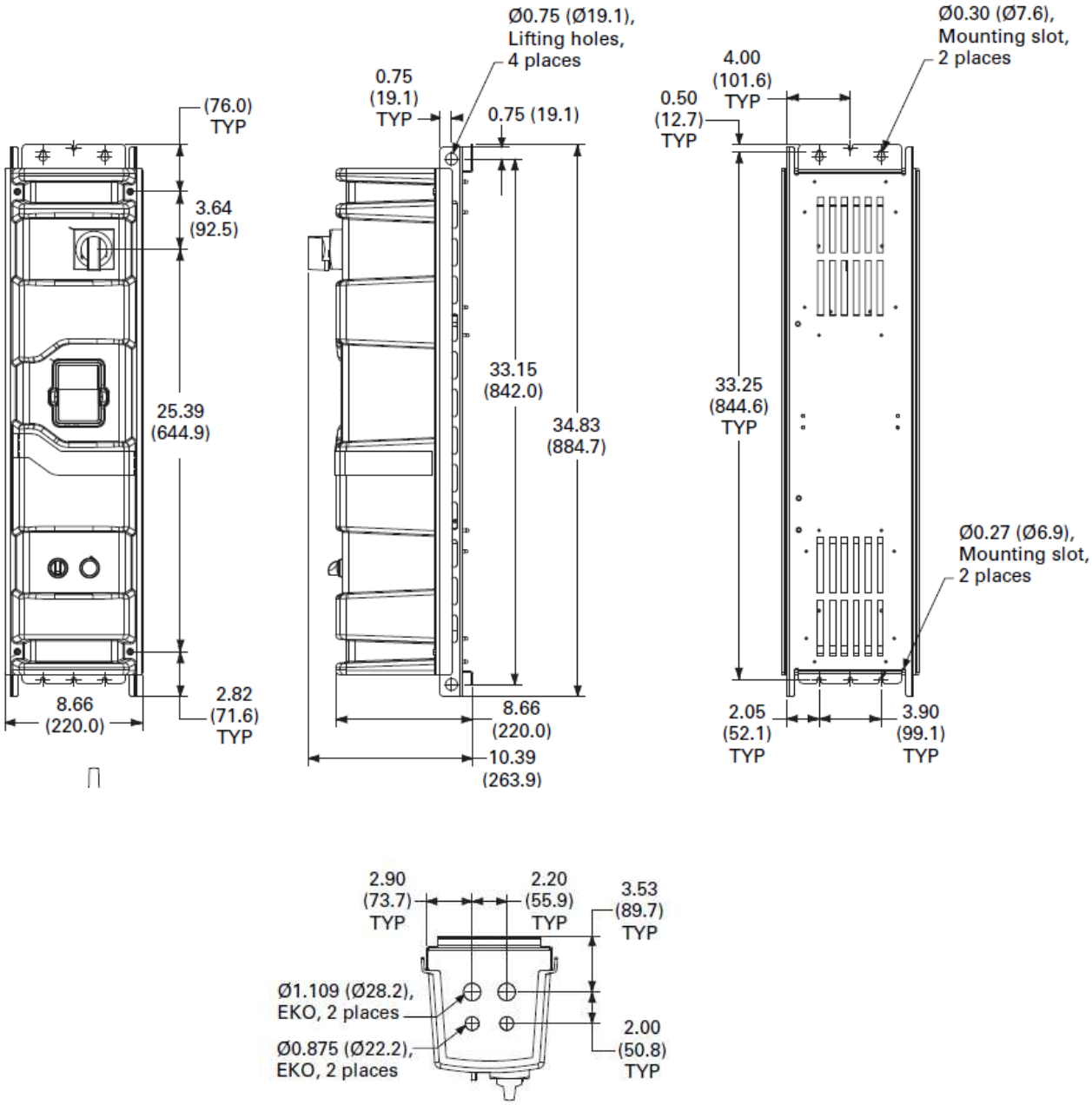

Top View shown, bottom view is mirror image, including mounting holes.

Disconnect and Bypass Drive Dimensions

Inches (mm)

Frame Size: H1

Packaged Weight: 62.8 lbs

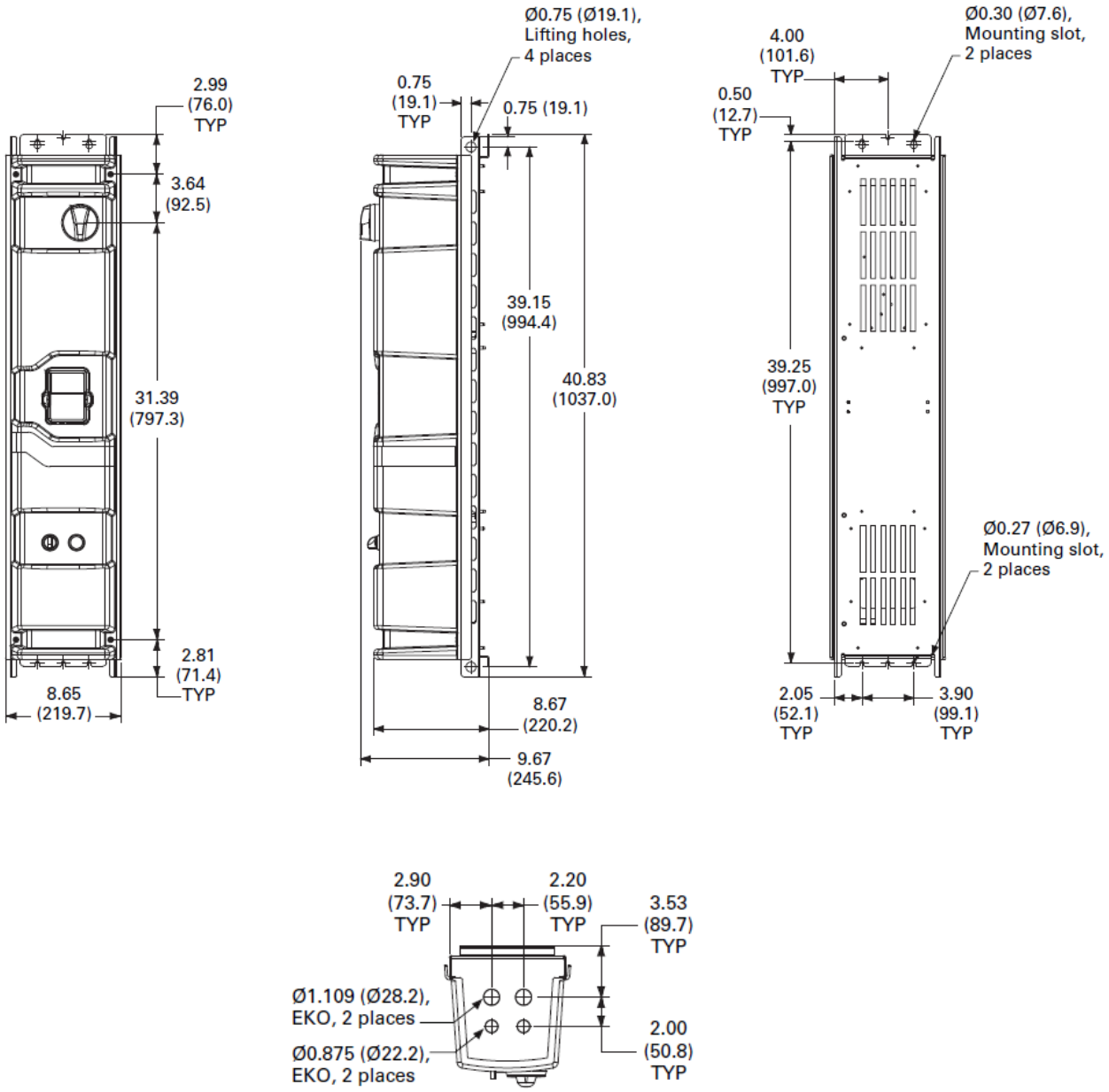

Top View shown, bottom view is mirror image, including mounting holes.

Disconnect and Bypass Drive Dimensions

Inches (mm)

Frame Size: H2S

Packaged Weight: 66.2 lbs

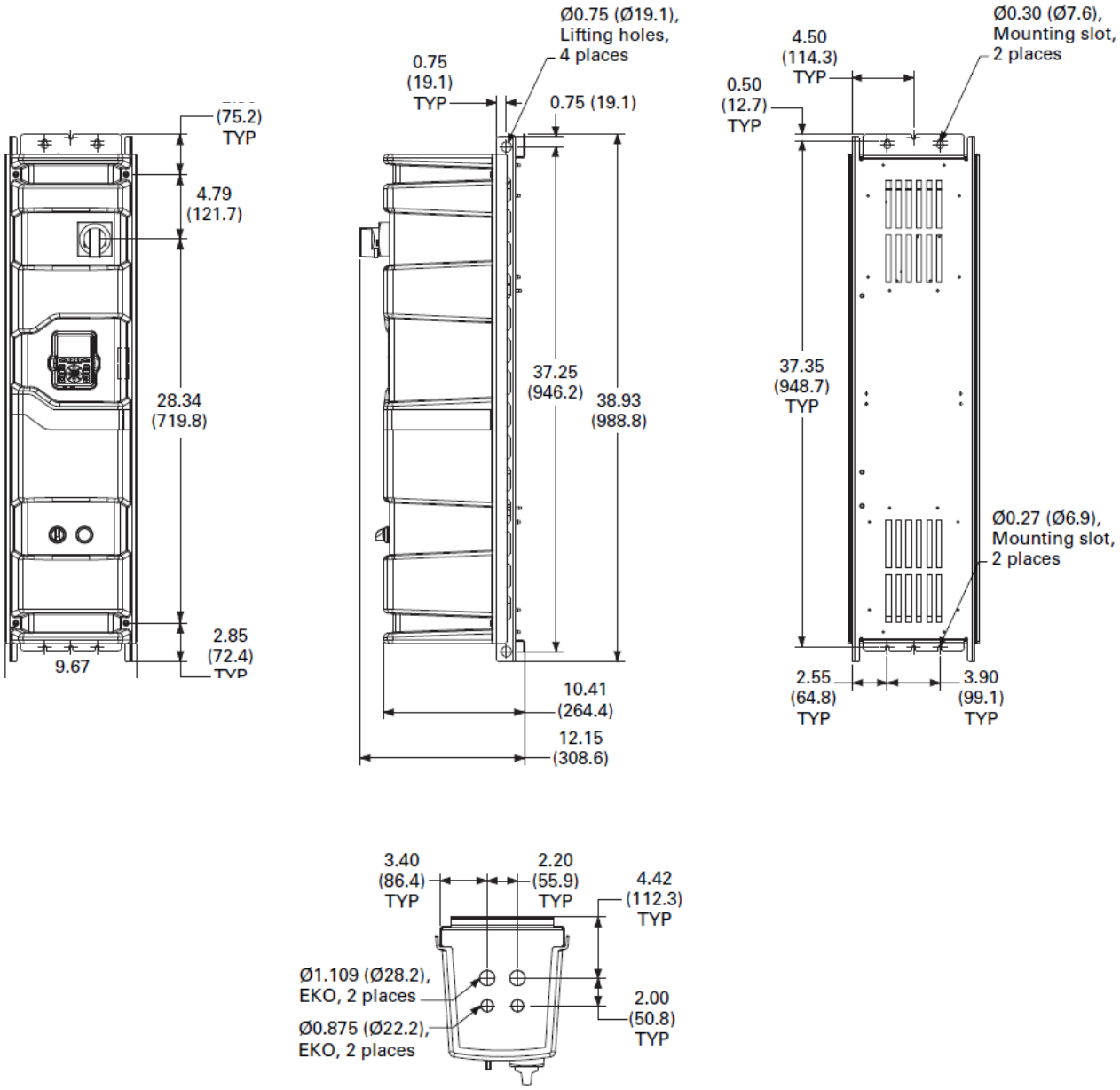

Top View shown, bottom view is mirror image, including mounting holes.

Disconnect and Bypass Drive Dimensions

Inches (mm)

Frame Size: H2

Packaged Weight: 63.7 lbs

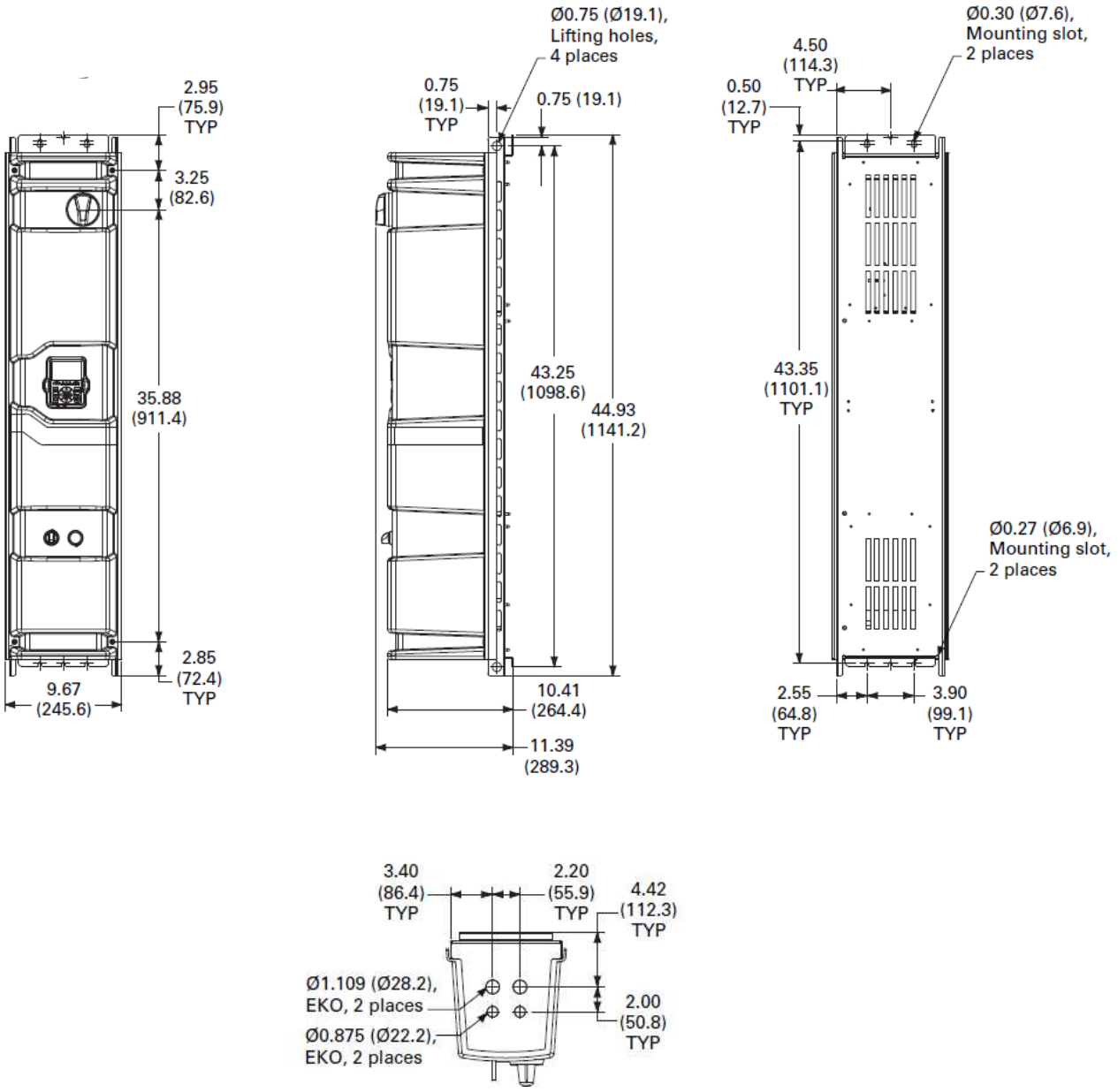

Top View shown, bottom view is mirror image, including mounting holes.

Disconnect and Bypass Drive Dimensions

Inches (mm)

Frame Size: H3

Packaged Weight: 153 lbs

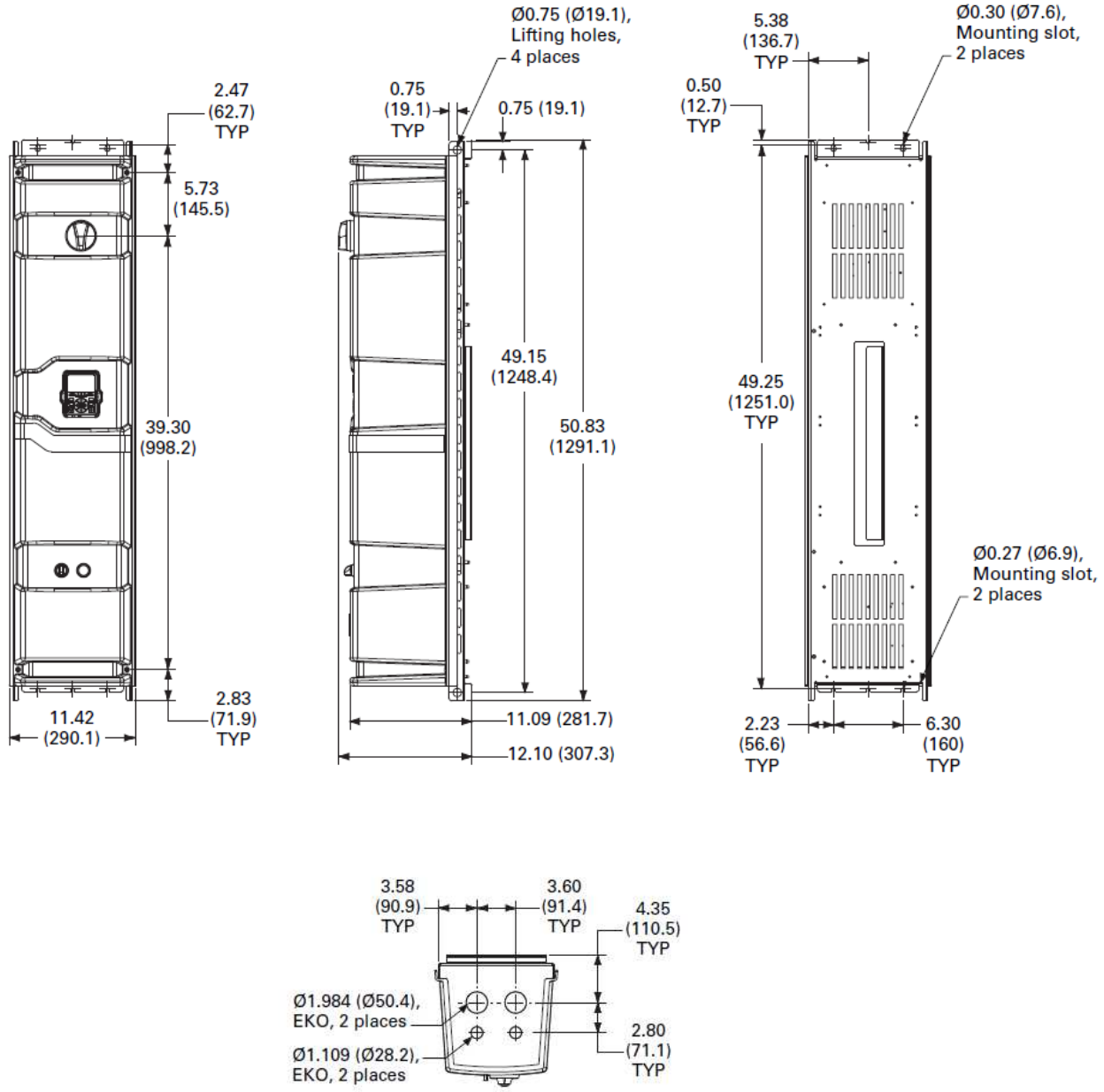

Top View shown, bottom view is mirror image, including mounting holes.

Disconnect and Bypass Drive Dimensions

Inches (mm)

Frame Size: H3X Type 12 & 3R

Packaged Weight: 206 lbs (Type 12), 216 lbs (Type 3R)

Type 12

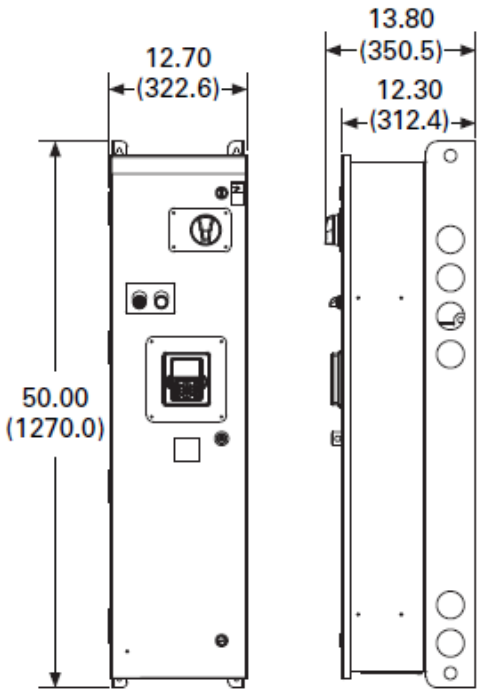

Type 3R

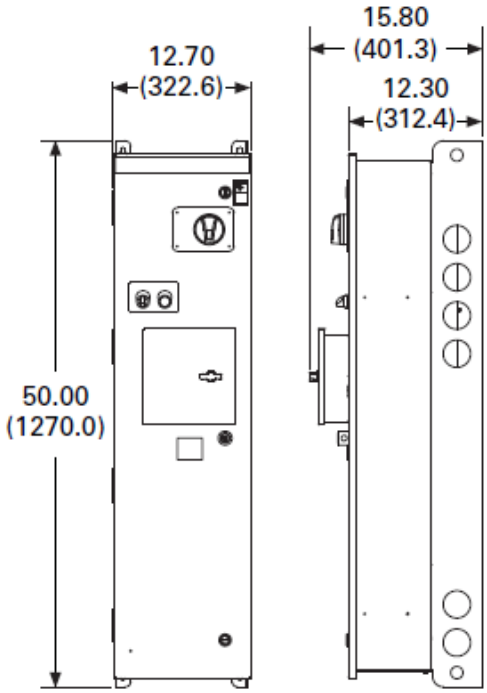

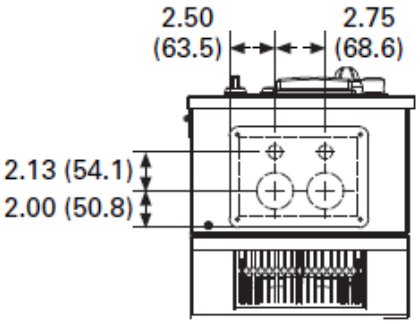

Bottom View

Disconnect and Bypass Drive Dimensions

Inches (mm)

Frame Size: H4

Packaged Weight: 215 lbs

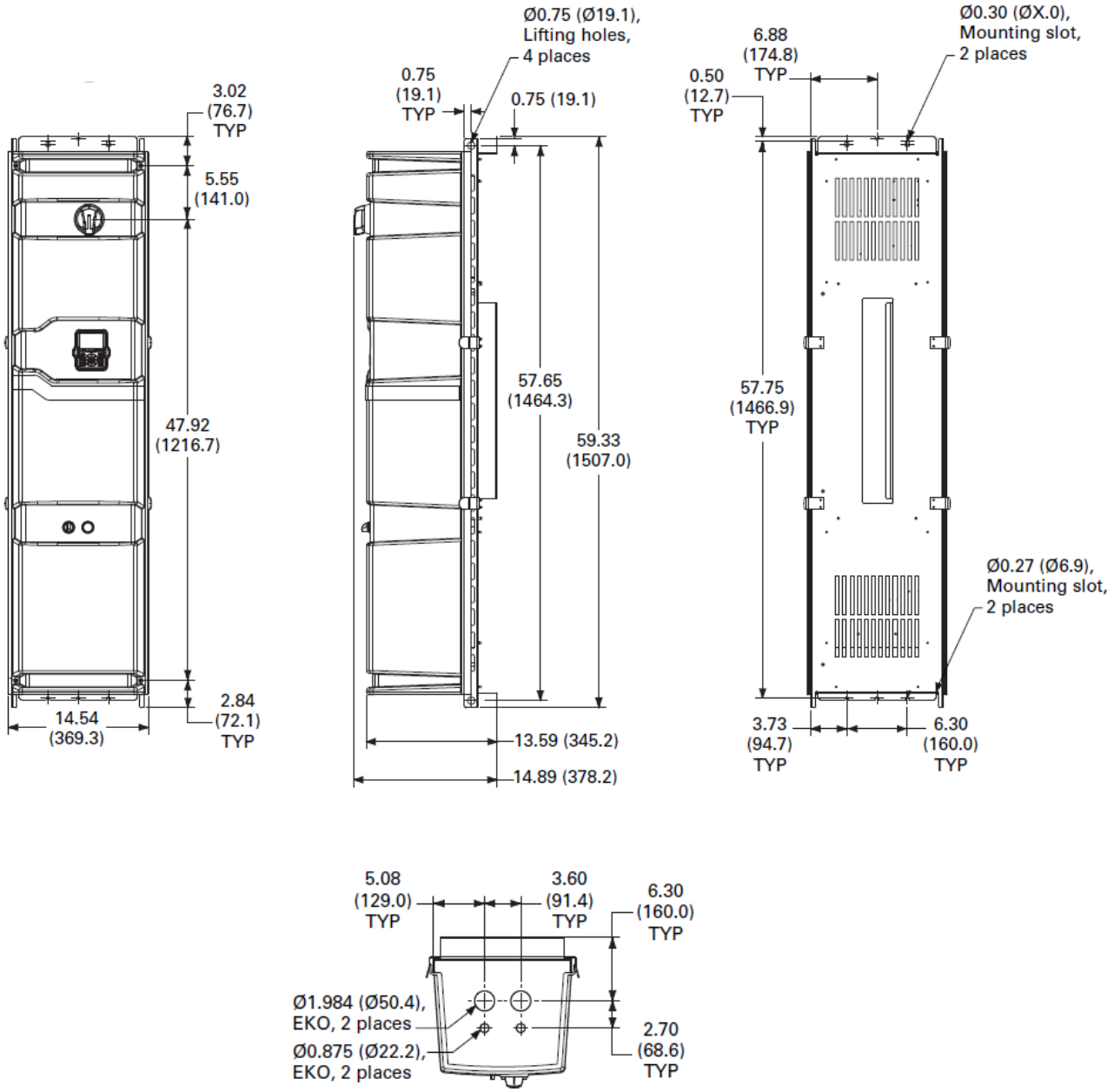

Top View shown, bottom view is mirror image, including mounting holes.

Disconnect and Bypass Drive Dimensions

Inches (mm)

Frame Size: BX Type 12

Packaged Weight: 311 lbs

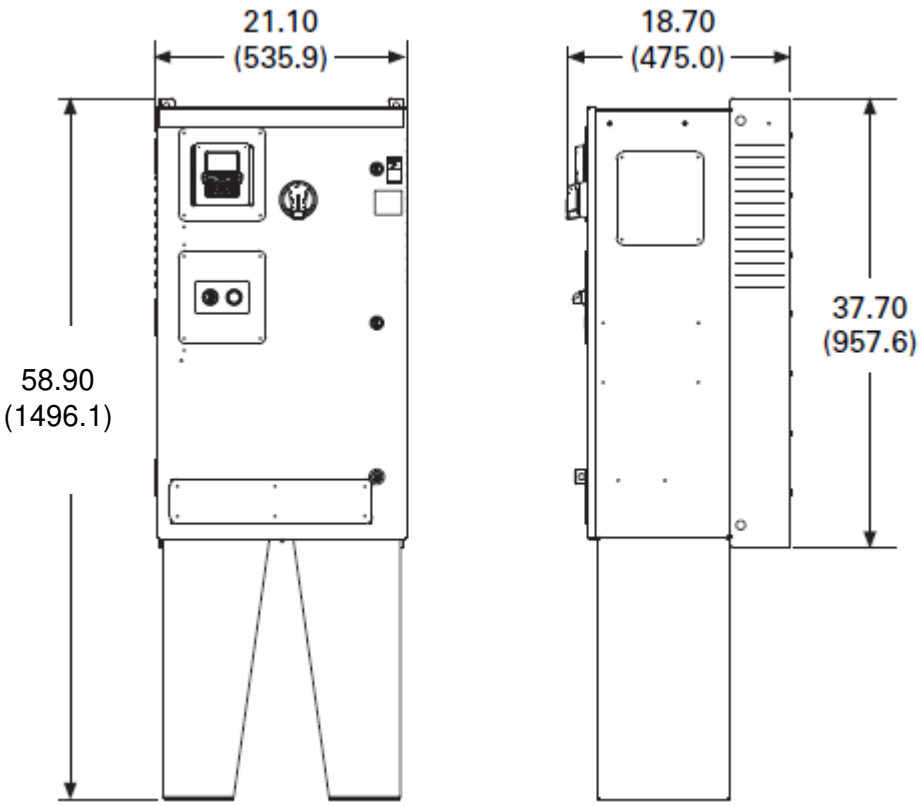

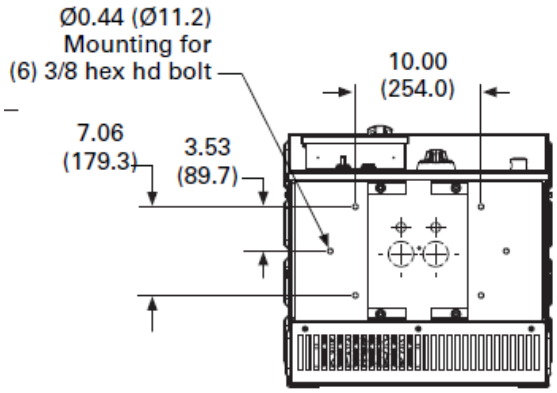

Bottom View

Disconnect and Bypass Drive Dimensions

Inches (mm)

Frame Size: BX Type 3R

Packaged Weight: 335 lbs

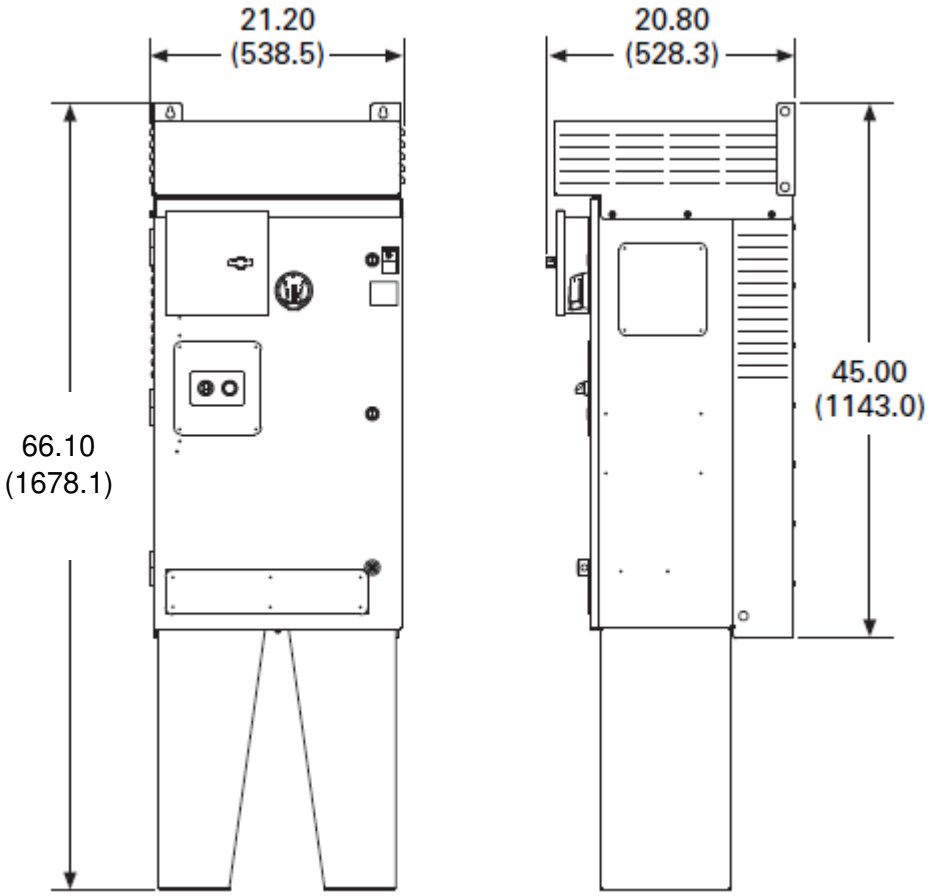

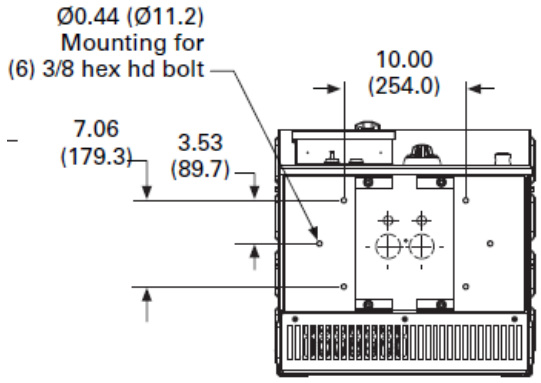

Bottom View

Disconnect and Bypass Drive Dimensions

Inches (mm)

Frame Size: CX Type 1 & 12

Packaged Weight: 536 lbs

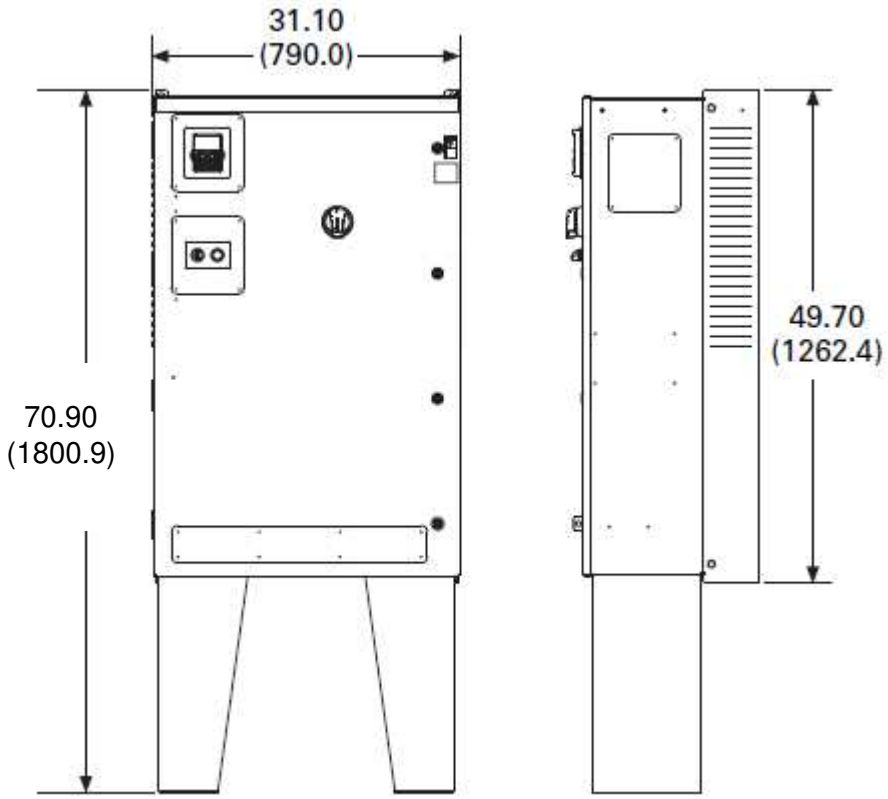

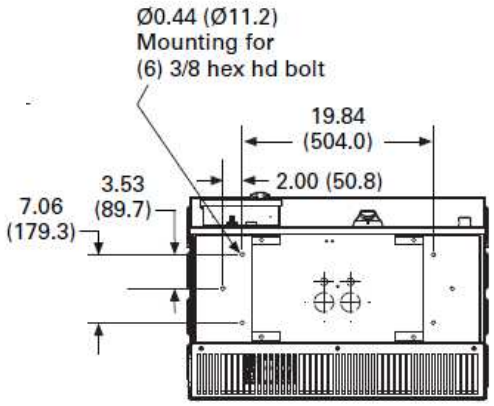

Bottom View

Disconnect and Bypass Drive Dimensions

Inches (mm)

Frame Size: CX Type 3R

Packaged Weight: 560

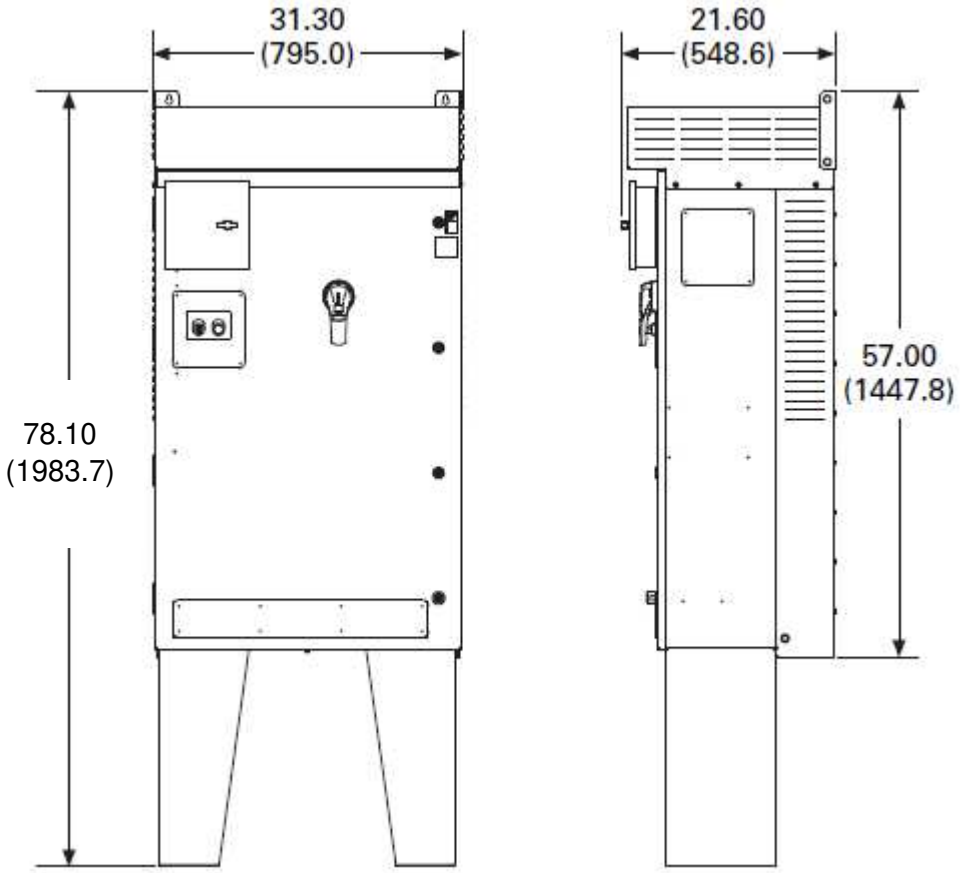

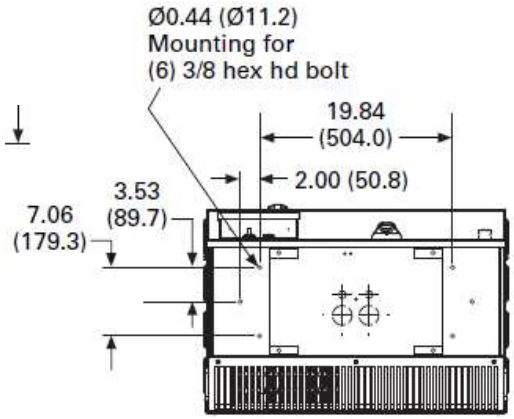

Bottom View

Disconnect and Bypass Drive Dimensions

Inches (mm)

Frame Size: DX Type 1 & 12

Packaged Weight: 1003 lbs

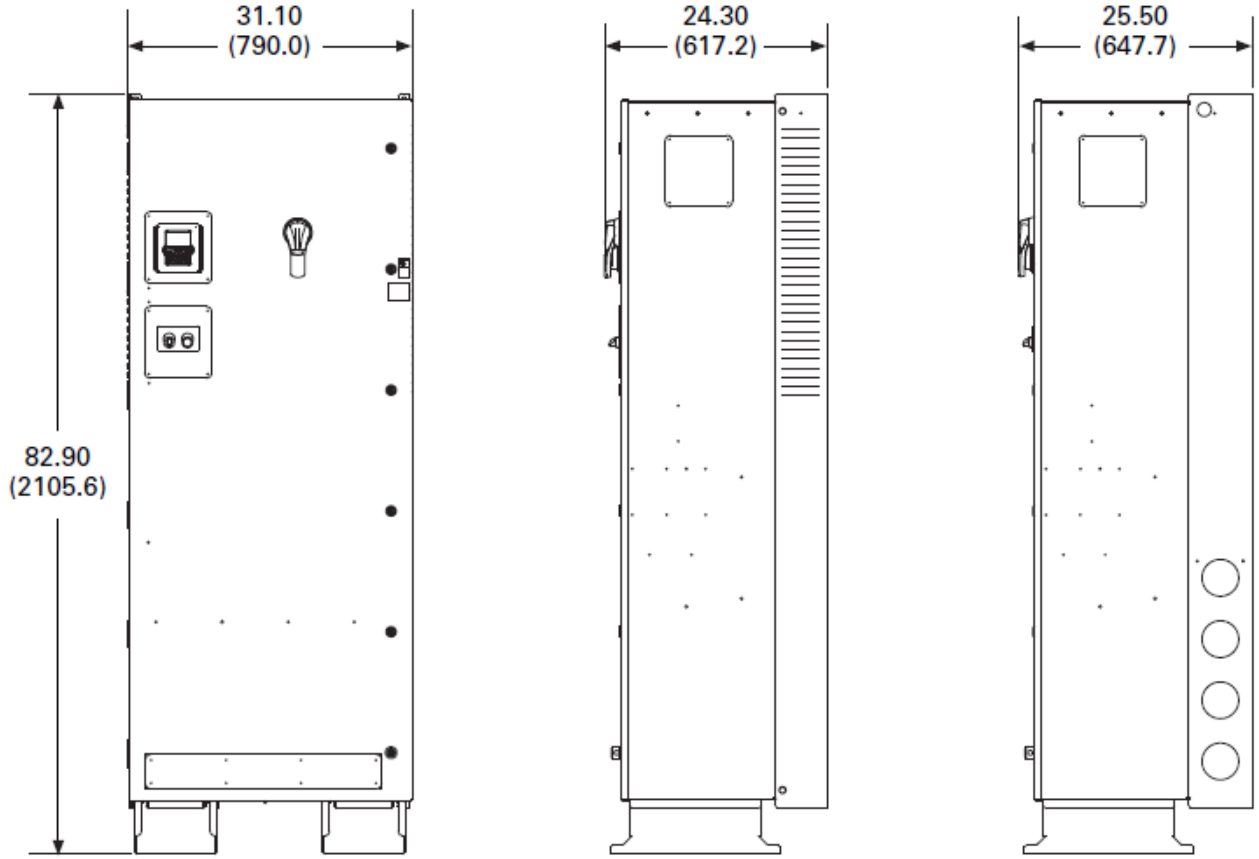

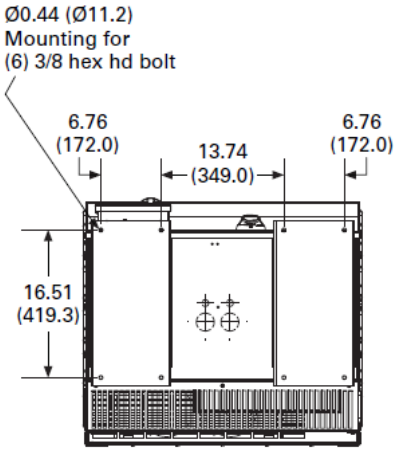

Bottom View

Disconnect and Bypass Drive Dimensions

Inches (mm)

Frame Size: DX Type 3R

Packaged Weight: 1053 lbs

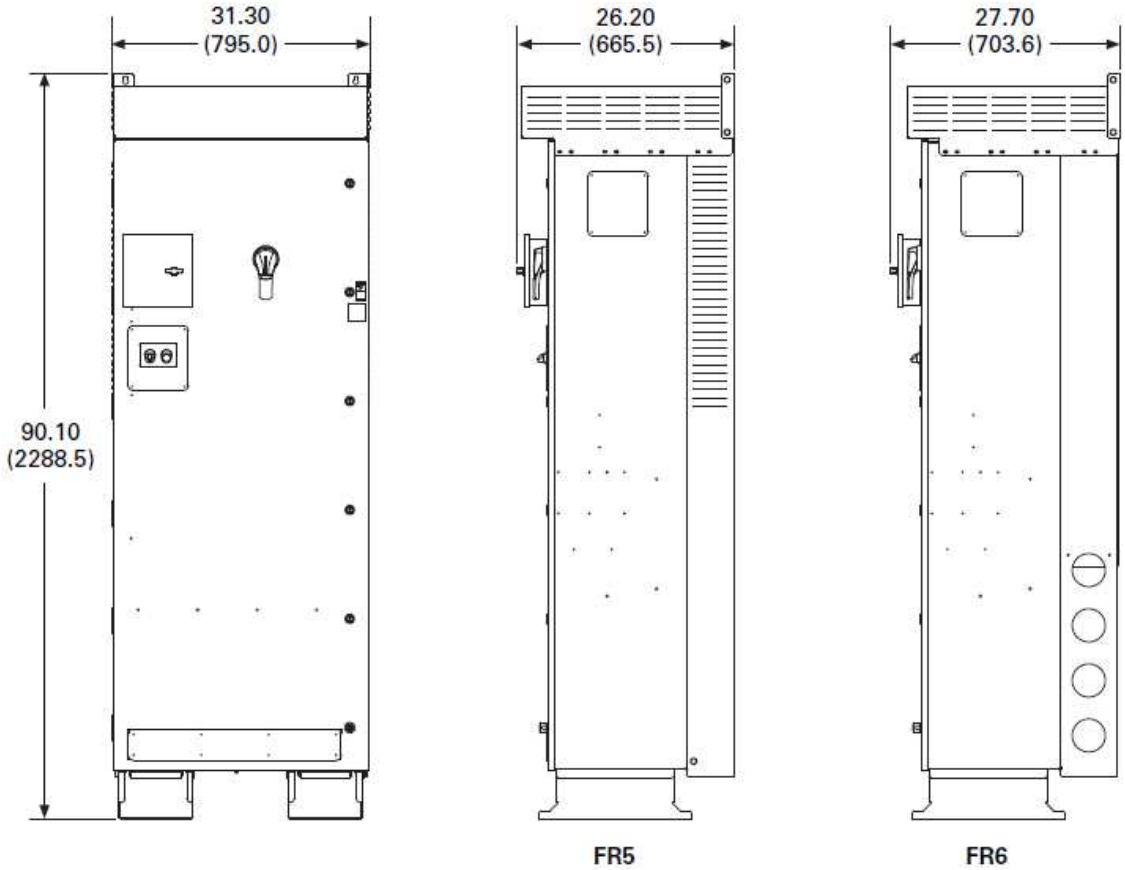

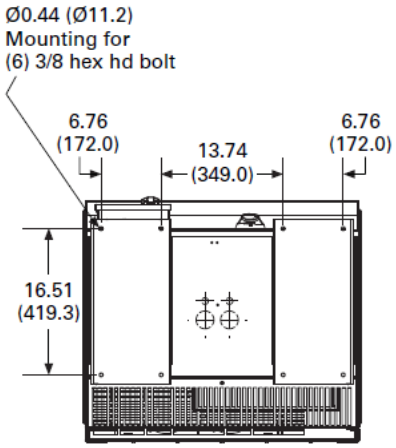

Bottom View

Typical Enclosed Product Configuration

Bypass

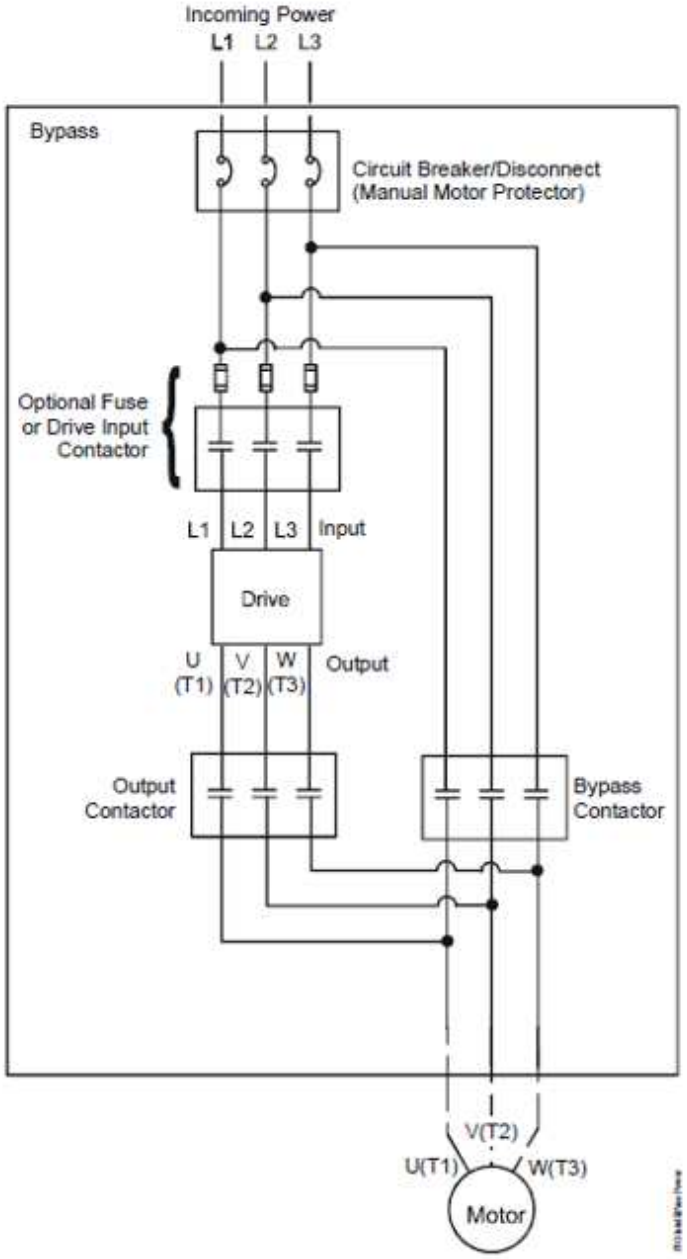

Disconnect

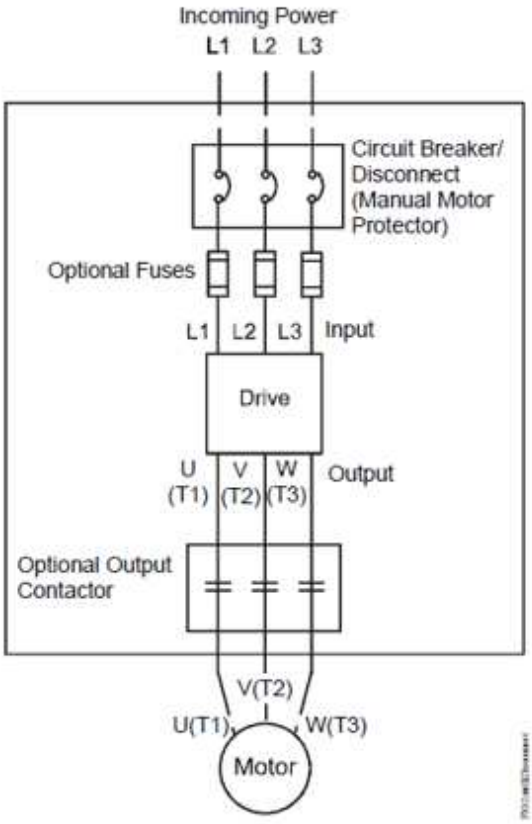

Factory-set control terminal functions

I/O Connection

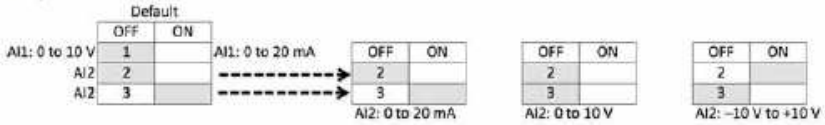

External Wiring ①	Pin	Signal Name	Signal	Default Setting	Description
	1	+10V	Ref. Output Voltage	—	10 Vdc Supply Source
	2	AI1+ ②	Analog Input 1	0–10V	Voltage Speed Reference (Programmable to 4 mA to 20 mA)
	3	AI1–	Analog Input 1 Ground	—	Analog Input 1 Common (Ground)
	4	AI2+ ③	Analog Input 2	4 mA to 20 mA	Current Speed Reference (Programmable to 0–10V)
	5	AI2–	Analog Input 2 Ground	—	Analog Input 2 Common (Ground)
	6	GND	I/O Signal Ground	—	I/O Ground for Reference and Control
	7	DIN5	Digital Input 5	Preset Speed B0	Sets frequency output to Preset Speed 1
	8	DIN6	Digital Input 6	Fire Mode	Enables drive into Fire Mode
	9	DIN7	Digital Input 7\TI+	Bypass Start	Enables drive into Bypass mode waiting for drive start
	10	DIN8	Digital Input 8\TI-	Force Auto	Input forces drive into Auto Control place
	11	CMB	DI5 to DI8 Common	Grounded	Allows source input
	12	GND	I/O Signal Ground	—	I/O Ground for Reference and Control
	13	24V	+24 Vdc Output	—	Control voltage output (100 mA max.)
	14	DO1	Digital Output 1	Ready	Shows the drive is ready to run
	15	24Vo	+24 Vdc Output	—	Control voltage output (100 mA max.)
	16	GND	I/O Signal Ground	—	I/O Ground for Reference and Control
	17	AO1+	Analog Output 1	Output Frequency	Shows Output frequency to motor 0–60 Hz (4 mA to 20 mA)
	18	AO2+	Analog Output 2	Motor Current	Shows Motor current of motor 0–FLA (4 mA to 20 mA)
	19	24Vi	+24 Vdc Input	—	External control voltage input
	20	DIN1	Digital Input 1	Run Forward	Input starts drive in forward direction (start enable)
	21	DIN2	Digital Input 2	Run Reverse	Input starts drive in reverse direction (start enable)
	22	DIN3	Digital Input 3	External Fault	Input causes drive to fault
	23	DIN4	Digital Input 4	Fault Reset	Input resets active faults
	24	CMA	DI1 to DI4 Common	Grounded	Allows source input
	25	A/+	RS-485 Signal A	—	Fieldbus Communication (Modbus, BACnet)
	26	B/–	RS-485 Signal B	—	Fieldbus Communication (Modbus, BACnet)
	27	R3NO	Relay 3 Normally Open	Fault	Relay output 3 shows VFD is Faulted
	28	R1NC	Relay 1 Normally Closed	Bypass Run	Relay output 1 shows VFD is in a bypass run state
	29	R1CM	Relay 1 Common		
	30	R1NO	Relay 1 Normally Open		
	31	R3CM	Relay 3 Common	Fault	Relay output 3 shows VFD is Faulted
	32	R2NC	Relay 2 Normally Closed	Run	Relay output 2 shows VFD is in a drive run state
	33	R2CM	Relay 2 Common		
	34	R2NO	Relay 2 Normally Open		

Series III Open Drive

Technical Specifications

Attribute	Description	Specification
Input ratings	Input voltage U_{in}	208 V to 240 V, 380 V to 500 V, 525 V to 600 V, –15 to 10%
	Input frequency	50 Hz to 60 Hz (variation up to 45 Hz to 66 Hz)
	Connection to power	Once per minute or less
	Starting delay	3 s (FR1 to FR2), 4 s (FR3), 5 s (FR4), 6 s (FR5 and FR6)
	Short-circuit withstand rating	100 kAIC (fuses and circuit breakers); 5 kAIC (without fuses or breakers)
Output ratings	Output voltage	0 to U_{in}
	Continuous output current	I_L: ambient temperature maximum 40 °C, up to 60 °C with derating, overload 1.1 x I_L (1 min./10 min.)
	Overload current	110% for variable torque
	Initial output current	200% (2 s / 20 s)
	Output frequency	0–400 Hz (standard)
	Frequency resolution	0.01 Hz
Control characteristics	Control methods	Frequency control Speed control Open-loop speed control Open-loop torque control
	Switching frequency	230 V / 480 V range: FR1–3: 1 kHz to 12 kHz FR4–6: 1 kHz to 10 kHz 230 V / 480 V defaults: FR1–3: 4 kHz FR4–5: 3.6 kHz FR6: 2 kHz 575 V range: FR1–6: 1 kHz to 6 kHz 575 V defaults: FR1–4: 3 kHz FR5–6: 2 kHz Automatic switching frequency derating in case of overload.
	Frequency reference	Analog input: resolution 0.1% (10-bit), accuracy +1% Analog output: resolution 0.1% (10-bit), accuracy +1% Panel reference: resolution 0.01 Hz
	Field weakening point	20 Hz to 400 Hz
	Acceleration time	0.1 s to 3000 s
	Deceleration time	0.1 s to 3000 s
	Braking torque	DC brake: 30% x Motor Rated Torque (Tn) (without brake chopper) Dynamic braking (with optional brake chopper using an external brake resistor): 100% continuous maximum rating

Ambient conditions	Ambient operating temperature	–10 °C (no frost) to +50 °C, up to +60 °C with derating (CT) –10 °C (no frost) to +40 °C, up to +60 °C with derating (VT)
	Storage temperature	–40 °C to +70 °C
	Relative humidity	0–95% RH, noncondensing, non-corrosive
	Air quality: • Chemical vapors • Mechanical particles	Tested according to IEC 60068-2-60 Test Key: Flowing mixed gas corrosion test, Method 1 (H2S [hydrogen sulfide] and SO2 [sulfur dioxide]) Designed according to: IEC 60721-3-3, unit in operation, class 3C2 IEC 60721-3-3, unit in operation, class 3S2
	Altitude	100% load capacity (no derating) up to 3280 ft (1000 m); 1% derating for each 328 ft (100 m) above 3280 ft (1000 m); max. 9842 ft (3000 m) (2000 m for corner grounded earth main systems) For 575 V product, maximum altitude is 6561 ft (2000 m) regardless of main system

Attribute	Description	Specification
Ambient conditions, continued	Vibration: • EN 61800-5-1 • EN 60668-2-6	5–150 Hz Displacement amplitude: 1 mm (peak) at 5 Hz to 15.8 Hz (FR1–FR6) Maximum acceleration amplitude: 1g at 15.8 Hz to 150 Hz (FR1–FR6)
	Shock: • ISTA 1 A • EN 60068-2-27	Storage and shipping: maximum 15 g, 11 ms (in package)
	Overvoltage	Overvoltage Category III
	Pollution degree	Pollution Degree 2
	Enclosure class	IP21/Type 1 standard in entire kW/hp range IP54/Type 12 option Note: Keypad or keypad hole plug required to be mounted in drive for IP54/Type 12 rating
	Immunity	Fulfills EN 61800-3 (2004), first and second environment
	MTBF	FR1: 165,457 hours FR2: 134,833 hours FR3: 102,515 hours FR4: 121,567 hours FR5: 108,189 hours FR6: 100,000 hours
	Noise	FR1: 51.2 dB FR2: 58.6 dB FR3: 61.0 dB FR4: 68.0 dB FR5: 69.1 dB FR6: 73.2 dB
Standards	Safety	UL 508C, CSA C22.2 No. 274-13 and EN 61800-5-1
	EMC	+EMC2: EN 61800-3 (2004), Category C2 The drive can be modified for IT networks and corner grounding TN system
	Electrostatic discharge	Second environment, IEC 61000-4-2, 4 kV CD or 8 kV AD, Criterion B
	Fast transient burst	Second environment, IEC 61000-4-4, 2 kV/5 kHz, Criterion B
	Dielectrical strength	Primary to secondary: 3600 Vac/5100 Vdc Primary to earth: 2000 Vac/2828 Vdc
	Approvals	EAC, RCM (C-Tick), RoHS, CE, UL and cUL (see nameplate for more detailed approvals)
Fieldbus connections		Onboard: BACnet/IP, BACnet MS/TP, Modbus TCP, Modbus RTU

Johnson Controls Inc., Sensor Actuator (SA bus)

Series III Keypad

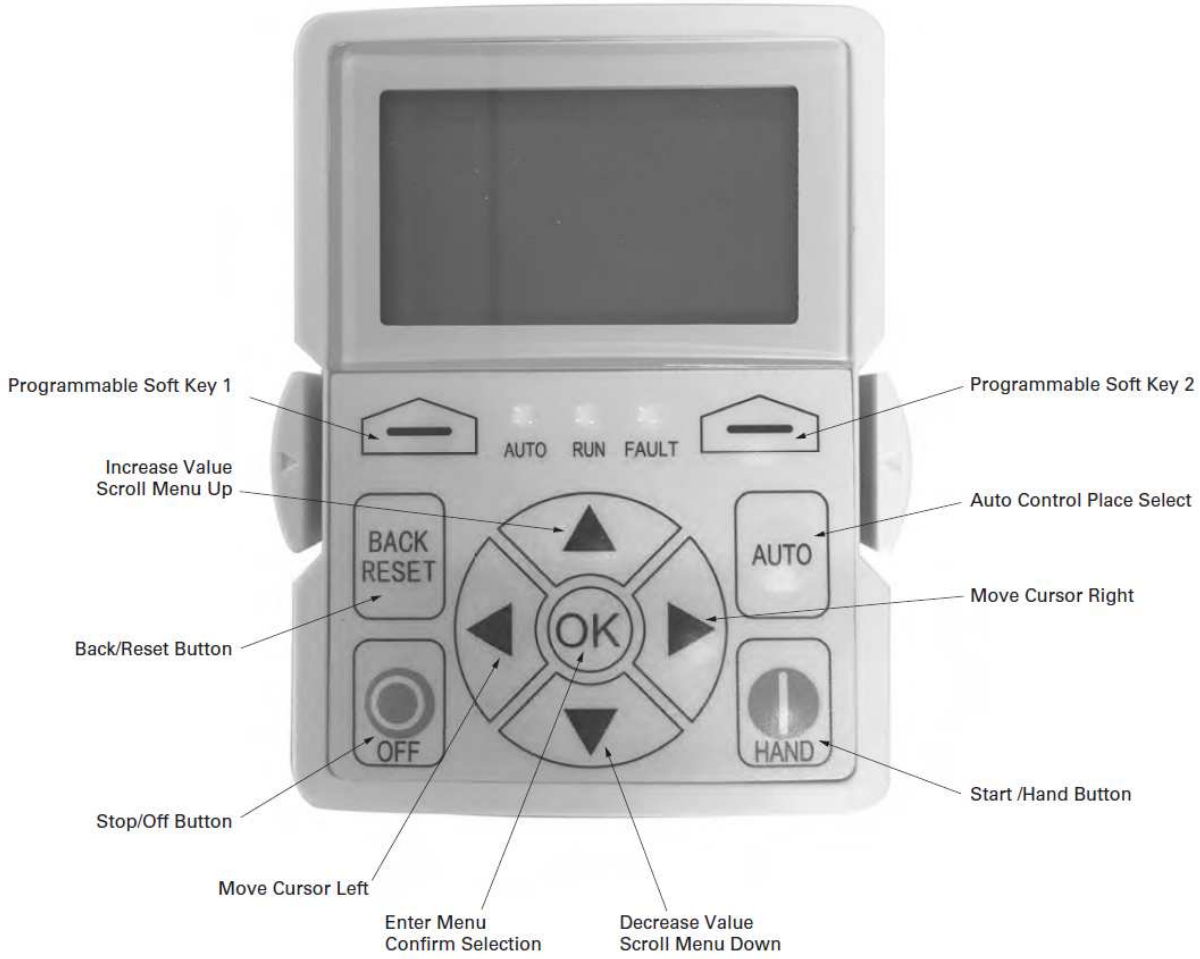

Related Documentation

Document Title	LIT Number
Series III Variable Speed Drives Enclosed Product Installation Manual	LIT-12013227
Series III Variable Speed Drives Quick Start Guide	LIT-12012996
Series III Variable Speed Drives Installation Leaflet	LIT-12012997
Series III Variable Speed Drives Installation Manual	LIT-12012998
Series III Variable Speed Drives Application Manual	LIT-12012999
Series III Variable Speed Drives Communications Manual	LIT-12013000